BETA REV series

40÷240 kW

General

High energy efficiency, personalised chillers and heat pumps with scroll compressors for indoor installations.

Configurations

HP: heat pump

SLN: Super Low Noise

LE: condensing unit

LE/HP: reversible condensing unit

RFA: setup with AC radial fans

RFE: setup with EC radial fans

DS: Desuperheater

DC: Heat exchange condenser

Pump and integrated buffer tank available as option

Strengths

- Unit with Night Shift function
- Advanced control always available as option
- Multilogic
- Integrated hydraulic modules also with a buffer tank.
- Three types of pumps: standard, oversize and for high percentages of glycol (e.g. up to 50%).
- Availability of pumps with inverter on user side.
- Setup with AC or EC radial fans

INDEX

SPECIFICATIONS	3
TECHNICAL SPECIFICATIONS - BETA REV	16
TECHNICAL SPECIFICATIONS - BETA REV RFE	18
TECHNICAL SPECIFICATIONS - BETA REV RFA	20
TECHNICAL SPECIFICATIONS -BETA REV LE	22
TECHNICAL SPECIFICATIONS - BETA REV SLN	23
TECHNICAL SPECIFICATIONS - BETA REV RFE SLN	24
TECHNICAL SPECIFICATIONS - BETA REV RFA SLN	25
ELECTRICAL SPECIFICATIONS - BETA REV - BETA REV LE	26
ELECTRICAL SPECIFICATIONS - BETA REV RFE	26
ELECTRICAL SPECIFICATIONS - BETA REV RFA	27
ELECTRICAL SPECIFICATIONS - BETA REV SLN	28
ELECTRICAL SPECIFICATIONS - BETA REV RFE SLN	29
ELECTRICAL SPECIFICATIONS - BETA REV RFA SLN	29
RATED DATA FOR PUMPS	30
ALLOWED FLOW RATE RANGE	30
OPERATING LIMITS - BETA REV - BETA REV RFE - BETA REV RFA	32
COOLING	32
RECOVERY	32
HEATING	32
OPERATING LIMITS - BETA REV LE	33
COOLING	33
RECOVERY	33
HEATING	33
OPERATING LIMITS - BETA REV SLN - BETA REV RFE SLN - BETA REV RFA SLN	34
COOLING	34
RECOVERY	34
HEATING	34
VERSIONS THAT ARE NOT POSSIBLE - BETA REV	35
VERSIONS THAT ARE NOT POSSIBLE - BETA REV RFE	35
VERSIONS THAT ARE NOT POSSIBLE - BETA REV RFA	36
VERSIONS THAT ARE NOT POSSIBLE - BETA REV SLN	36
VERSIONS THAT ARE NOT POSSIBLE - BETA REV RFE SLN	37
VERSIONS THAT ARE NOT POSSIBLE - BETA REV RFA SLN	37
NOISE LEVELS - BETA REV	38
NOISE LEVELS - BETA REV LN	38
NOISE LEVELS - BETA REV RFE	39
NOISE LEVELS - BETA REV RFE LN	39
NOISE LEVELS - BETA REV RFA	40
NOISE LEVELS - BETA REV RFA LN	40
NOISE LEVELS - BETA REV SLN	41
NOISE LEVELS - BETA REV RFE SLN	41
NOISE LEVELS - BETA REV RFA SLN	41
DIMENSIONAL DIAGRAMS	42

SPECIFICATIONS

Water chiller unit with hermetic scroll compressors, air heat rejection with centrifugal fans and user-side plate heat exchanger.

Refrigerant fluid: R410A

STRUCTURE

The structure of the unit is made of galvanized sheet-iron coated with polyester powder RAL 7035 at 180°C, which makes it highly resistant to weather conditions.

The structure is a load-bearing frame, with removable panelling lined with sound absorbing expanded polyurethane matting.

All screws and bolts are stainless steel.

COMPRESSORS

The compressors are hermetic orbiting spiral scroll compressors connected in tandem. They are provided with oil level sight glass, internal Klixon® thermal overload protection or external Kriwan© module (depending on the model) and oil equalisation line.

The compressors are enclosed in a dedicated technical compartment, which can be accessed by removing the panelling that allows maintenance operations to be carried out even with units running.

All the compressors are fitted as standard with crankcase heater.

SOURCE-SIDE HEAT EXCHANGER

For the cooling only units, the exchangers are made with microchannel aluminium coils.

For /HP units, finned pack coils with copper tubes and aluminium fins are used. These also have a special circuit for keeping the lower part of the coil free of ice by circulation of gas at high temperature.

Thanks to continuous research in the field of metal alloys and to sophisticated production methods, microchannel coils are made using specific aluminium alloys for the tubes and for the fins. This allows the effects of galvanic corrosion to be drastically reduced to always ensure protection of the tubes that confine the refrigerant. Tubes and fins are also subjected to SilFLUX coating processes (or equivalent) or have zinc added to further increase their corrosion resistance.

If the unit has to be installed in an environment with a particularly aggressive atmosphere, e-coated microchannel coils are available as an option. This option is strongly recommended for applications in coastal or highly industrialized areas.

The use of microchannel coils compared to conventional copper/aluminium coils reduces the total weight of the unit by about 10% and gives a reduction in refrigerant charge of at least 30%.

To protect the exchangers from corrosion and ensure optimal operation of the unit, we advise following the recommendations given in the user, installation and maintenance manual for cleaning the coils.

For installations within a kilometre of the coast, the use of Cu/Al coils with anti-corrosion treatment is strongly recommended for cooling only units too.

The exchanger is protected by a metal mesh.

The /HP units are fitted as standard with condensate collection tank placed under the coil. The tank has one or more connections to which the customer must connect with pipes of suitable diameter, to direct the condensate from defrost cycles to a drain.

FANS

The standard fans are statically and dynamically balanced dual suction centrifugal fans with forward-curved blades, with belt and pulley transmission, connected to three-phase 4-pole electric motors.

The fan includes a safety guard in conformity with standard UNI EN 294.

Alternatively, the unit can be requested with /RFA or /RFE option that uses radial fans with backward-curved blades with directly coupled motor.

All units have vertical exhaustion as standard and, for the basic unit, the available pressure is 50Pa. Horizontal exhaustion and higher pressures are available as accessories.

USER-SIDE HEAT EXCHANGER

The exchanger is a braze-welded stainless steel plate heat exchanger, insulated with a shroud of closed-cell insulating material.

For dual circuit models, the unit uses two exchangers already manifolded inside the unit and therefore with a single hydraulic connection.

The exchanger is also equipped with thermostat-controlled anti-freeze heater to protect it from ice formation when the unit is not running.

REFRIGERANT CIRCUIT

Each refrigerant circuit of the basic unit (cooling only) comprises:

- valve on the liquid line
- charging valves
- liquid sight glass
- replaceable solid cartridge dehydrator filter (except for sizes 3.2, 4.2 and 5.2 where the filter is a weld-on filter)
- thermostatic expansion valve with pressure equalization
- high and low pressure switches

The pipes of the circuit and the exchanger are insulated with extruded closed-cell expanded elastomer.

As an accessory, all the units can be fitted with an electronic expansion valve that allows machine stability to be reached more quickly and better superheating control than the mechanical expansion valve, to maximize the use of the evaporator in all load conditions.

ELECTRICAL CONTROL PANEL

The electrical control panel is made in a painted galvanized sheet-iron box with forced ventilation and IP54 protection rating.

Blue Box reserves the right to alter specifications.

The electrical control panel of the basic unit comprises:

- main disconnect switch
- automatic circuit breakers for compressors with fixed calibration
- fuses for the fans and auxiliary circuits
- thermal magnetic circuit breakers for the pumps (if present)
- contactors for the compressors, fans and pumps (if present)
- phase monitor
- potential free general alarm contacts
- single potential free operating contacts for compressors, fans and pumps (if present)
- microprocessor control with display accessible from the outside

All the electrical cables inside the panel are numbered and the terminal board dedicated to the customer's connections is coloured blue so that it can be quickly identified in the panel.

The power supply to the unit is 400V/3~/50Hz for all models.

CONTROL

Thermoregulation of the unit controls water temperature at the inlet to the user-side heat exchanger. Outlet water temperature control is available as an option.

As standard, the unit uses a parametric controller that allows the following functions:

- freeze protection
- compressor timings
- automatic rotation of compressor starting sequence
- management of capacity reduction due to high pressure limit
- display of alarms
- recording of log of last 100 alarms - in addition to the alarm, it shows the date, time and type of operation of the unit when the alarm occurs
- an RS485 serial port with Modbus protocol
- clock board
- sliding defrost management
- digital input for remote ON/OFF
- digital input for remote Summer/Winter selection
- digital input for remote selection of double set point
- display of hours of operation of all the compressors
- display of starts per hour of the compressors
- position a compressor or a circuit to OFF from button
- display the time left to the start of the next defrost cycle

The control has a 6-button interface with a display that can display 2 quantities and 20 icons at the same time, so as to see the unit's operating state at a glance.

The "Advanced controller" accessory is available as an option and adds the following to the above-listed functions:

- recording of all the variables and parameters of the unit with sampling for 15 seconds - this allows a log to be kept with FIFO logic that covers about 20 days, depending on the size of machine
- an Ethernet serial port with TCP/IP protocol and Modbus over IP
- an integrated WEB server with display pages and management of preloaded pages

Both types of control have a display that allows the following to be shown:

- water inlet and outlet temperatures
- set temperature and differential set points
- description of the alarms (only for the advanced control)
- hour meter of operation and number of start-ups of the unit, the compressors and the pumps (if present)
- high and low pressure values
- condensing and evaporating temperatures (only for the advanced control)
- external air temperature
- superheating at compressor suction (only for the advanced control)

For further details on available functions and on displayed information, you can refer to the specific documentation of the control.

By default, the serial connections present as standard are enabled only for reading from BMS.

CONTROLS AND SAFETY DEVICES

- chilled water temperature probe
- antifreeze probe at outlet of each user-side heat exchanger
- high pressure switch (with manual reset)
- low pressure safety device (with manual reset managed by the control)
- high pressure safety valve
- protection against compressor overtemperature
- protection against fan overtemperature
- water flow sensor already installed and wired that, depending on the version and size of machine, will be a differential water pressure switch or a paddle flow switch.

TESTING

All the units are factory-tested and supplied complete with oil and refrigerant.

VERSIONS

Alongside the basic version, there are other versions that differ in efficiency and noise levels..

BETA REV SLN: super low noise unit

The SLN version unit uses a soundproofed compressor compartment and oversize coils compared to the standard efficiency unit that allows a reduction in the air flow rate. The speed reduction of the fans is such that, under nominal operating conditions, the air flow rate and noise level are lower than those of the basic version of the unit.

BETA REV LE: motocondensing unit

Compared to the basic unit, the LE version is without user-side heat exchanger and thermostatic expansion valve (to be posi-

tioned on the remote evaporator).

The unit is supplied with:

- standard solenoid valve on the liquid line
- pressurised refrigerant circuit charged with nitrogen (therefore without refrigerant charge)
- weld-on refrigerant connections closed with copper plugs

BETA REV LE/HP: reversible motocondensing unit
Compared to the HP version, the LE/HP version is without user-side heat exchanger and thermostatic expansion valve for operation in air conditioning mode (to be positioned on the remote evaporator). The solenoid valve on the liquid line is supplied as standard. The unit is supplied with:

- standard solenoid valve on the liquid line
- pressurised refrigerant circuit charged with nitrogen (therefore without refrigerant charge)
- weld-on refrigerant connections closed with copper plugs

OPTIONS

/RFA: set-up with AC radial fans
Units with this option are made using radial fans with backward-curved blades, without scroll.

The 4-pole electric motor is directly coupled

and controlled by a phase cutting speed adjuster.

With this type of fan, the use of belts and pulleys that need greater maintenance is avoided.

For some sizes, this option requires the addition of an exhaust plenum placed above the machine. Plenum and fans are fixed with screws and can therefore be disassembled on site to make it easier to pass through doorways.

Refer to the specific dimensional drawings for further details.

All units have vertical exhaustion as standard and, for the basic unit, the available pressure is 50Pa.

/RFE: set-up with EC radial fans
Units with this option are made using radial fans with backward-curved blades, without scroll.

The directly coupled electric motor is an EC (Electronically Commutated) motor.

In addition to higher efficiency given by there being no rubbing parts or shearing of magnetic fields, this type of fan allows self-adaptation to the head losses of the aeraulic ducting, even when these change over time because of the fouling of filters and channels. The correct speed of the fans is identified according to the condensing control that is standard for units with this option.

With this type of fan, the use of belts and pulleys that need greater maintenance is avoided.

For some sizes, this option requires the addition of an exhaust plenum placed above the machine. Plenum and fans are fixed with screws and can therefore be disassembled on site to make it easier to pass through doorways.

Refer to the specific dimensional drawings for further details.

All units have vertical exhaustion as standard and, for the basic unit, the available pressure is 50Pa.

For some sizes, this option requires the addition of an exhaust plenum placed above the machine. Plenum and fans are fixed with screws and can therefore be disassembled on site to make it easier to pass through doorways.

Refer to the specific dimensional drawings for further details.

/HP: reversible heat pump
In addition to the basic set-up, HP units comprise (for each refrigerant circuit):

- 4-way reversing valve
- fluid accumulator
- second thermostatic expansion valve.

For defrost management, the control of the unit uses a sliding intervention threshold, depending on the pressures inside the unit and the external air temperature. By putting together all this information, the control can identify the presence of ice on the coil and activates the defrosting sequence only when necessary, so as to maximize the energy efficiency of the unit.

Summer/winter switching can be done from the control keypad, digital input or BMS (requires write enabling of the advanced controller).

/DC: unit with recovery condenser
In addition to the basic set-up, the /DC units comprise:

- a recovery condenser for recovering 100% of the condensation heat on each refrigerant circuit. The exchanger is a braze-welded plate heat exchanger.

For dual circuit units, the exchangers are to be manifolded outside the unit (by the customer).

- temperature probe at the inlet of each recovery exchanger.

For dual circuit units, the probe is supplied with the unit and is to be positioned on the exchanger inlet manifold (by the customer).

- liquid receiver for each refrigerant circuit with system for emptying the refrigerant from the condensing coil
- potential free contact in the electrical control panel for activation of recovery.

When required by the system, through the closing of a contact, the control automatically manages activation of recovery. Recovery management is carried out through a control on the temperature of the return water.

The control also automatically manages safety deactivation of recovery if the condensing pressure becomes too high, and changes to using the condensing coils.

This option is not available for /HP units

/DS: unit with desuperheater
In addition to the basic set-up, /DS units comprise (for each refrigerant circuit) an exchanger for condensation heat recovery of up to 20% (depending on size, version and operating conditions), placed in series with the condensing coil. The exchanger is a braze-welded plate heat exchanger.

For dual circuit units, the exchangers are to be manifolded outside the unit (by the customer).

To maximize the use of the accessory and optimize machine

Blue Box reserves the right to alter specifications.

operation, combination with the speed adjuster of the fans or with the EC fans is recommended. This option is also available for /HP units, but in this case, in the installation, it must have provision for shutting off the recovery water circuit during operation in heat pump mode to avoid taking power from the user-side heat exchanger.

/LN: low noise unit
In the unit with /LN option, the technical compartment that houses the compressors is fully soundproofed with sound absorbing material and soundproofing material.

/HAT: unit for high external air temperatures
The unit fitted with this accessory adopts an electrical control panel made using specific components to withstand high temperatures, special cables and oversize protection parts. The accessory enables the unit to work with external air temperatures of over 46°C as indicated in the section on operating limits.

Units with hydraulic module
All units can be fitted with hydraulic module in various configurations:

- /1P: hydraulic module with one pump
- /2P: hydraulic module with two pumps
- /1PS: hydraulic module with one pump and buffer tank
- /2PS: hydraulic module with two pumps and buffer tank

All the above-mentioned modules have pumps with standard discharge head. The following are also available:

- modules /1PM, /2PM, /1PMS and /2PMS that have pumps with increased available discharge head
- modules /1PG, /2PG, /1PGS and /2PGS that have pumps suitable for operating with glycol up to 50%

Hydraulic modules with one pump have:

- one pump
- a gate valve on the delivery side of the pump
- an expansion vessel

Hydraulic modules with two pumps have:

- two pumps
- a check valve on the delivery side of each pump
- a gate valve on the outlet of the delivery manifold
- an expansion vessel

In the version with 2 pumps, these are always with one on standby while the other is working. Switching over between the pumps is automatic and is done by time (to balance the hours of operation of each one) or in the event of failure.

Hydraulic modules with tank also have:

- a gate valve at the inlet of the pump or the suction manifold
- a tank with drain valve and air valve

Refer to the table of configurations that are not possible to check for availability of specific set-ups.

DESCRIPTION OF ACCESSORIES

CODE	Accessory	Operation and advantages
		REFRIGERANT CIRCUIT ACCESSORIES
RG	Condensing control with fan speed adjuster	This accessory is applicable only to units with the /RFA option. The control manages the speed of the fans through a phase cutting speed adjuster, in order to optimize the operating conditions and efficiency of the unit. By checking the condensing pressure, the control adjusts the speed of the fans in order to overcome the aeraulic head losses and so ensures achievement of the correct air flow rate to the source-side heat exchanger. Control is dynamic and therefore a function of the real operating conditions of the unit and of the level of fouling of filters and channels. For HP units, the control also carries out evaporating control when the unit is working in heat pump mode. For units with the /RFE option, this functionality is supplied as standard.
TEMP	Condensing control by steps	With this accessory, the condensing pressure of the unit is controlled through the stepped switching off of the fans. There are two steps for units with 2 fans and three steps for units with 3 or 4 fans.
SERR	Condensing control with modulating damper	This accessory consists of installing a modulating damper installed on the exhaust outlet. This is operated by a servo motor controlled by the control to change the air flow rate depending on the condensing pressure.
MAFR	Pressure gauges	The operating pressures of each circuit of the unit can be displayed on the control by accessing the relevant screens. Also, the machine can be fitted with pressure gauges (two for each circuit) installed in a clearly visible position. These allow reading in real time of the working pressures of the refrigerant gas on the low pressure side and on the high pressure side of each refrigerant circuit.
RIC	Liquid receivers.	The adoption of this accessory always guarantees correct feeding of the expansion valve even when the unit is subjected to wide external air temperature ranges. This accessory is standard on DC and HP units.
RUB	Compressor suction and delivery valves	The valves situated on the suction and delivery manifolds of the compressors allow the tandem or the trio to be isolated from the rest of the refrigerant circuit, so making the maintenance operations quicker and less invasive.
DVS	Double safety valve	With this accessory, instead of each individual safety valve per circuit, there is a "candelabrum" with two safety valves and a diverter valve for choosing the valve in operation. This allows the safety valves to be replaced without having to drain the machine and without having to stop it.
VS	Liquid line solenoid valve	This accessory prevents refrigerant migration that could damage the compressor on starting. Standard on HP units.
VTE	Electronic expansion valve	The use of this accessory is particularly advisable on units that have to work in conditions of very variable heat load, large differences in external air temperatures or frequent operating mode change, as in the case of combined management of air conditioning, heating and hot water production. The use of an electronic expansion valve allows you to: • maximize heat exchange at the user-side heat exchanger • minimize the response times of the refrigerant circuit to variations in the load and in the operating conditions • optimize superheating control
BK	Brine Kit	Application of this accessory is mandatory if the unit has to produce water with temperature lower than +3° (if the unit is provided with double set point or variable set point, the lower set point is considered). The accessory consists of adopting an increased insulation and a suitable sizing and calibration of some components. This accessory obligatorily requires the condensation control with speed governor or EC fans to be connected.
RPR	Refrigerant leak detector	With this accessory, a refrigerant leak detector is placed inside the compressor compartment. If the unit is fitted with the standard control (parametric), detection of a refrigerant leak causes the closing of a potential free contact shown in the terminal board and the activation of sound and visual signalling on the machine. If the unit is fitted with the advanced control, detection of a refrigerant leak is managed by the control through a specific alarm and display of a specific icon on the display of the control. This alarm does not stop the unit.

Blue Box reserves the right to alter specifications.

CODE	Accessory	Operation and advantages
RPP	Refrigerant leak detector with automatic pump down	With this accessory, a refrigerant leak detector is placed inside the compressor compartment. Detection of a refrigerant leak is managed by the control through a specific alarm and display of a specific icon on the display of the control. The alarm also starts the procedure of machine stopping with pump down, confining all the refrigerant in the coils. This accessory is available only in combination with the advanced control.
	FAN ACCESSORIES	
	Fans with available pressure of ... Pa	Depending on the available pressure required at the fan outlet, a different diameter of the pulleys is identified. In this case, the pulleys are variable diameter pulleys so as to be able to adjust the available pressure of ±30Pa.
EO	Horizontal exhaust for units with centrifugal fans	With this accessory, the scroll is fitted differently to the standard one, so that the air throw is horizontal instead of vertical. When this accessory is present, exhaustion is always on the opposite side to the coil.
EO	Horizontal exhaust for units with radial fans	With this accessory, the exhaust air delivery outlet is on the opposite side to the coil instead of on the cover. For some sizes, the application of this accessory requires the addition of an exhaust plenum that increases the height of the standard unit (refer to the specific dimensional drawing).

CODE	Accessory	Operation and advantages
		ACCESSORI CIRCUITO IDRAULICO
IVPO	Soundproofed pump compartment	With this accessory, the motor and the impeller of the pumps are enclosed in a compartment that is fully soundproofed with sound absorbing material and soundproofing material.
RA	Anti-freeze heater	In addition to the anti-freeze heater already present as standard on the user-side heat exchanger, with this accessory, anti-freeze heaters are also inserted on the pumps and in the tank (depending on the configuration of the machine) to prevent damage to the hydraulic components due to ice formation during periods when the machine is stopped. Based on normal operating conditions and the percentage of glycol in the system, an appropriate "antifreeze alarm" temperature is set in the control. When a temperature that is 1°C higher than the antifreeze alarm threshold is detected at the outlet from the exchanger, the pump (if present) and the antifreeze heaters are switched on. If the temperature of the outgoing water reaches the antifreeze alarm threshold, the compressors are stopped, keeping the heaters and the pumps active, and the general alarm contact of the machine is activated.
VSIW	Water-side safety valve	With this accessory, a safety valve is inserted in the hydraulic circuit of the unit: when the calibration pressure is reached, the valve opens and, by discharging (to be routed by the customer), prevents the system pressure from reaching limits that are dangerous for the components present in the system. The valves have positive action, that is, performance is guaranteed even if the diaphragm deteriorates or breaks.
FLUS	Flow switch (instead of the differential pressure flow switch)	As an alternative to the differential pressure switch (standard flow sensor), it is possible to request the paddle flow switch as accessory. This detects when there is no water flow to the user-side exchanger and sends a signal to the control of the unit that will stop the compressors to prevent damage to the exchangers. The flow switch is supplied with the unit (installation by the customer) and replaces the water differential pressure switch (standard).

Blue Box reserves the right to alter specifications.

CODE	Accessory	Operation and advantages

Blue Box reserves the right to alter specifications.

CODE	Accessory	Operation and advantages
		ACCESSORI ELETTRICI
CA	Advanced control	Compared to the parametric control fitted as standard, the advanced control adds the following functionalities • recording of all the variables and parameters of the unit with sampling for 15 seconds - this allows a log to be kept with FIFO logic that covers about 20 days, depending on the size of machine • an Ethernet serial port with TCP/IP protocol and Modbus over IP • an integrated WEB server with display pages and management of preloaded pages
PBA	BACnet protocol over IP (Ethernet)	The control is set for using the BACnet protocol (instead of Modbus) on the Ethernet port. By default, the programming gives read-only access to the control of the unit. Enabling of read/write access should be requested when ordering.
GLO	Gateway Modbus Lon-works	With this accessory, a RS485/Lon gateway is installed inside the electrical control panel. By default, the programming gives read-only access to the control of the unit. Enabling of read/write access should be requested when ordering.
FM2	Multilogic function for Master unit for managing up to 2 Slaves	With this accessory, the unit is programmed as master of a system of machines in Multilogic network (for further details, refer to the control manual). Also, a network gateway with 4 ports is installed in the electrical control panel of the unit to allow the unit to be connected to an external LAN network and up to 2 slave units to be managed.
FM6	Multilogic function for Master unit for managing up to 6 Slaves	With this accessory, the unit is programmed as master of a system of machines in Multilogic network (for further details, refer to the control manual). Also, a network gateway with 8 ports is installed in the electrical control panel of the unit to allow the unit to be connected to an external LAN network and up to 6 slave units to be managed.
FM0	Multilogic function for Slave unit	With this accessory, the unit is programmed as slave of a system of machines in Multilogic network (for further details, refer to the control manual).
LIID	Limitation of the current absorbed by digital input	When this accessory is requested, a digital input is prepared in the terminal board to activate the forced capacity reduction of the unit to a set fixed level. This accessory is useful when there is a need to necessarily limit the power absorbed by the unit as regards particular conditions.
RIF	Power factor correction to cosφ ≥ 0.95	With this accessory, an electrical control panel, containing power factor correction condensers to bring the cosφ of the unit to being greater than 0.95, is supplied with the unit. The condensers should be connected (by the customer) to the electrical control panel of the unit in the specially prepared terminal board. Besides reducing the absorbed reactive power, the use of this accessory also allows the maximum absorbed current to be lowered.
COTW	Outgoing water tempera-ture control	When this accessory is requested, the unit is set to use the water outlet temperature (instead of the inlet temperature) as reference for thermoregulation. This system requires the management of a neutral zone to the control; the lower the number of compressors of the unit, the wider this zone will be.
SETD	Double set point from digital input	For units fitted with this accessory, it is possible to preset two different operating set points and manage the change from one to the other through a digital signal. The set point temperatures must be specified when ordering.
SETV	Variable set point with remote signal	For units fitted with this accessory, the set point can be varied continuously between two preset values, a maximum and a minimum, depending on an external signal that can be of the 0-1V, 0-10V or 4-20mA type.
CSP	Set point compensation depending on external air temperature	For units fitted with this accessory, the set point of the unit is set so that it can vary between two values, a maximum and a minimum, depending on the external air temperature. The compensation ramp and the maximum and minimum values of the set point can be changed by the user. Unless otherwise specified in the order, the control will be set to implement a negative compensation logic according to the temperatures shown in the following diagrams:

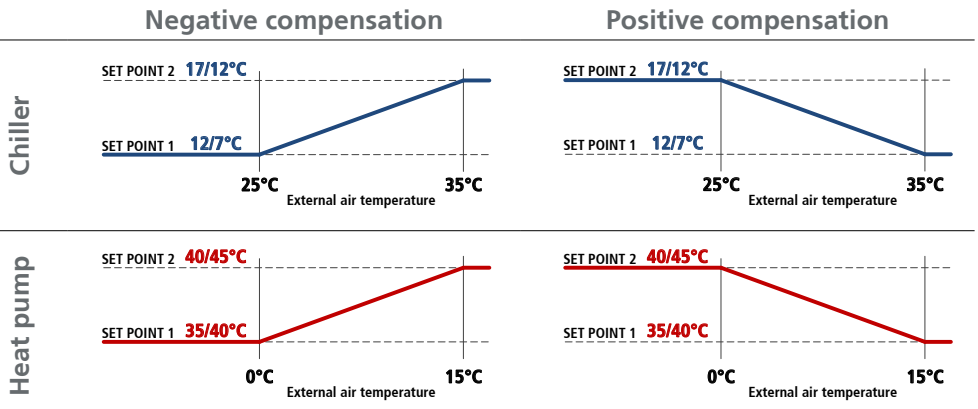

Blue Box reserves the right to alter specifications.

CODE	Accessory	Operation and advantages
RE1P	**Relay for management of 1 external pump**	This accessory can be requested for units without pumps and allows a pump outside the machine to be controlled.
RE2P	**Relay for management of 2 external pumps**	This accessory can be requested for units without pumps and allows two pumps outside the machine to be controlled with a running/stand-by logic by implementing a rotation on the hours of operation.
TERM	**Remote-controlled user terminal**	This accessory consists of a replica of the control that can be remotely operated up to 150m, from which it is possible to work completely on the configuration of the unit and display all its parameters on the display. This terminal is suitable for insertion in an ordinary electrical enclosure box (box 503) and does not need an external power supply unit because it takes its power directly from the control of the unit. The terminal is also fitted with an NTC temperature probe and can therefore work as a room thermostat (for LE or LE/HP units combined with air handling units). The parameters are accessed by entering passwords that enable the various modification levels.
TERM	**Remote-controlled user terminal** (unit with advanced control)	This accessory allows the terminal normally situated on the machine to be replicated on a support situated at a distance. It is particularly suitable when the unit is placed in an area that is not easily accessible. The accessory is supplied with the unit and is to be installed by the customer at a maximum distance of 120m from the unit.
RMMT	**Maximum and minimum voltage relay**	This accessory constantly monitors the voltage value and the unit's power supply phase sequence. If the supply voltage does not fall within the set parameters or there is a phase reversal, an alarm is generated that stops the machine to prevent damage to its main parts.
IA	**Automatic circuit breakers**	With this accessory, automatic circuit breakers are installed for the protection of auxiliary loads and fans. Also, this accessory uses automatic circuit breakers with adjustable thermal overload protection to protect the compressors.
ARU	**Stopping of the unit due to temperatures below the operating limit**	With this accessory, it is possible to set the unit so that the controller switches off the compressors when the unit is operating in heat pump mode and the external air temperature falls below a minimum set limit: this will prevent the unit from going into low pressure alarm, so avoiding having to manually restart the machine. At the same time, the control will enable a digital output that can be used for activating an auxiliary heat source. When the external air temperature returns above the set threshold temperature, the unit will automatically resume operation without it being necessary to do anything. For units equipped with integrated pump, the pump will always be kept running so as to prevent ice formation and ensure correct reading of the temperature and antifreeze safety probes at all times. The stopping temperature must be set based on the set point temperature and in accordance with what is allowed by the operating limits of the machine. With the default programming, the limit that considers a production of outgoing water at 45°C is set, therefore -7°C for standard units and -10°C for /HE and /SLN units. The same function can be used to set an external air temperature below which to use an alternative heat source because it is more efficient or economically more advantageous.
NSS	**Night Shift System**	This accessory is applied to high efficiency /LN version units with speed adjuster or to SLN units. In the day time band, which is normally the one with the highest heat load, priority is given to efficiency and therefore the machine works with a fan control curve that maximises the EER. In this time band, therefore, the unit is a high efficiency low noise machine (equivalent to HE/LN) In the night time band, priority goes to keeping down the noise of the machine and therefore the control implements a reduction of the air flow rate using a specific speed adjuster control curve. So in this time band, the unit is a super low noise machine (equivalent to SLN). The time bands can be set from the control depending on installation requirements.
SQE	**Heater for electrical control panel**	Electric heaters are positioned inside the electrical control panel and these prevent the formation of ice or condensation inside it.

Blue Box reserves the right to alter specifications.

CODE	Accessory	Operation and advantages
		OTHER ACCESSORIES
AG	Rubber anti-vibration mounts	These allow you to reduce the vibrations transmitted from the unit to the surface it is standing on. Accessory supplied with the unit.
AM	Spring anti-vibration mounts	These allow you to reduce the vibrations transmitted from the unit to the surface it is standing on. Accessory supplied with the unit.
MCHE	E-coated microchannel coil	The e-coated microchannel coils are treated by immersion of the whole exchanger in an emulsion of organic resins, solvents, ionic stabilisers and deionised water. This is all subjected to a suitable electric field that causes the formation of a solid, uniform deposit on the exchanger. The function of this deposit will be to protect the aluminium from corrosion without penalising its thermophysical properties. The choice of whether or not to treat the exchanger should be made with regard to the environment in which the unit is to be installed and through observation of other structures and machinery with exposed metal surfaces present in the destination environment. The cross observation criterion is the most valid method of selection currently available without having to carry out preliminary tests or measurements with instruments. The identified reference environments are: • marine coastal • industrial • urban with a high housing density • rural Please note that in cases where different conditions co-exist, even for short periods, the choice must be suitable for preserving the exchanger in the harsher environmental conditions and not in conditions between the worst and best situation. Particular attention must be given to cases where an environment that is not particularly aggressive becomes aggressive as a consequence of a local and/or temporal concomitant cause such as, for example, due to the presence of a heating flue outlet or an industrial kitchen or a solvent extraction fan in a small craft business. Protective treatment of the exchanger is strongly recommended if at least one of the points below is verified: • there are obvious signs of corrosion of the exposed metal surfaces in the installation area • the distance from the coast is less than 20 km • the prevailing winds come from the sea towards the unit • the environment is industrial with a significant concentration of pollutants • the environment is urban with a high population density • the environment is rural with the presence of organic discharges and effluents. For installations within a kilometre of the coast, the use of Cu/Al coils with anti-corrosion treatment is strongly recommended for cooling only units too. This accessory is not available for HP version units.
RAAL	Cu/Al coils	This accessory uses finned pack coils with copper tubes and aluminium fins instead of microchannel coils.
ALPR	Pre-painted aluminium coil	This accessory uses finned pack coils with copper tubes and aluminium fins pre-painted with an anti-corrosion treatment. This accessory is available only for HP version units.

CODE	Accessory	Operation and advantages
ANTC	Coil treated with anti-corrosion paints	The treatment is applied exclusively to finned pack coils with copper tubes and aluminium fins and consists of aluminium passivation and coating with a polyurethane base; a double layer of paint, of which the first passivates the aluminium and acts as primer and the second is a polyurethane based surface coating. The product has high resistance to corrosion and all environmental conditions. The choice of whether or not to treat the exchanger should be made with regard to the environment in which the unit is to be installed and through observation of other structures and machinery with exposed metal surfaces present in the destination environment. The cross observation criterion is the most valid method of selection currently available without having to carry out preliminary tests or measurements with instruments. The identified reference environments are: • marine coastal • industrial • urban with a high housing density • rural Please note that in cases where different conditions co-exist, even for short periods, the choice must be suitable for preserving the exchanger in the harsher environmental conditions and not in conditions between the worst and best situation. Particular attention must be given to cases where an environment that is not particularly aggressive becomes aggressive as a consequence of a local and/or temporal concomitant cause such as, for example, due to the presence of a heating flue outlet or an industrial kitchen or a solvent extraction fan in a small craft business. Protective treatment of the exchanger is strongly recommended if at least one of the points below is verified: • there are obvious signs of corrosion of the exposed metal surfaces in the installation area • the distance from the coast is less than 20 km • the prevailing winds come from the sea towards the unit • the environment is industrial with a significant concentration of pollutants • the environment is urban with a high population density • the environment is rural with the presence of organic discharges and effluents. For chiller units, this accessory also includes the “Cu/Al coil” accessory.
PREA	Partially assembled construction	The unit is delivered so that it can be disassembled easily on site if this makes the installation operations easier. A unit requested with this option is supplied: • screwed instead of riveted • with plugged and not welded pipes • without refrigerant charge • untested • covered by the warranty only if reassembled and screwed together by personnel authorized by the factory
SLIT	Special pallet/skid for container shipment	The unit is placed on a skid that makes the container loading and unloading operations easier. The accessory is mandatory if shipping by container is required
GABB	Packaging in wooden crate	The unit is enclosed in a treated and ISPM 15 marked wooden crate. This accessory is strongly advised for shipping by container.
RETE	Coil protection mesh with metal filter	Safety mesh, which protects people from accidentally touching the coil, combined with an aluminium filter to protect the coil from leaves and hail. This accessory cannot be combined with HP units.
VASC	Condensation collection tank for HP units	This accessory can be combined with HP units in order to collect the condensation that forms after each coil defrost cycle. The tank is made of stainless steel and is placed under the source-side heat exchanger, at a suitable distance. On the opposite sides of the tank, there are some 1” close nipples to allow the customer to connect a pipe to it for draining out the water so as not to cause harm or damage to people or objects.
RAV	Anti-freeze heater for condensation collection tank	A heating cable, glued to the bottom, can be combined with the condensation collection tank to prevent ice formation at the base of the coil or near the outlets. The heater is controlled by a thermostat and is activated depending on the external air temperature.
FW	Water filter	To protect the elements of the hydraulic circuit (in particular, the exchangers), there are Y filters that can stop and settle the particles that are normally present in the water flow and would otherwise settle in the more delicate parts of the hydraulic circuit and damage its heat exchange capacity. Installation of the water filter is mandatory even when it is not supplied as an accessory. Accessory supplied with the unit.

TECHNICAL SPECIFICATIONS - BETA REV

Unit Size			3.2	4.2	5.2	6.2	7.2	8.2	9.2	10.2	12.2
BETA REV											
Cooling (A35; W7)											
Refrigeration capacity	(1)	kW	40	45	53	60	67	81	93	102	116
Absorbed power	(1)	kW	17	20	22	22	26	29	34	39	47
EER	(1)		2,38	2,29	2,39	2,65	2,55	2,78	2,75	2,63	2,49
ESEER			3,57	3,55	3,59	3,79	3,73	3,82	3,81	3,72	3,74
BETA REV /HP											
Cooling (A35; W7)											
Refrigeration capacity	(1)	kW	40	45	52	59	66	80	90	98	114
Absorbed power	(1)	kW	17	20	22	23	26	30	35	40	48
EER	(1)		2,31	2,23	2,40	2,57	2,49	2,70	2,60	2,42	2,39
ESEER			3,55	3,50	3,60	3,75	3,67	3,78	3,71	3,59	3,55
Heating (A7; W45)											
Heating capacity	(2)	kW	42	47	55	63	70	84	95	104	122
Absorbed power	(2)	kW	17	19	20	22	24	29	32	36	44
COP	(2)		2,52	2,51	2,76	2,92	2,95	2,91	2,93	2,90	2,76
Compressors											
Quantity/Refrigerant circuits		n°/n°	2/1	2/1	2/1	2/1	2/1	2/1	2/1	2/1	2/1
Minimum capacity reduction step		%	50%	50%	50%	50%	50%	50%	43%	50%	44%
Refrigerant charge (CH)	(5)	kg	4	4	4	6	6	9	9	9	10
Refrigerant charge (HP)	(6)	kg	11	12	12	17	18	23	26	26	26
Fans											
Quantity		n°	1	1	1	2	2	3	3	3	3
Air flow rate BETA REV		m³/h	17.000	17.000	15.000	19.000	19.000	28.500	28.500	28.500	36.000
Available pressure rated/maximum		Pa	50 / 250	50 / 250	50 / 250	50 / 250	50 / 250	50 / 250	50 / 250	50 / 250	50 / 250
User-side heat exchanger											
Quantity			1	1	1	1	1	1	1	1	1
Water flow rate BETA REV	(1)	m³/h	7,0	7,8	9,2	10,3	11,5	14,0	16,0	17,6	20,1
Head losses BETA REV	(1)	kPa	38	33	33	42	22	33	28	34	34
Water flow rate BETA REV /HP	(1)	m³/h	6,9	7,7	9,0	10,1	11,4	13,8	15,6	16,9	19,7
	(2)	m³/h	7,2	8,1	9,5	10,8	12,0	14,3	16,2	17,8	20,8
Head losses BETA REV /HP	(1)	kPa	35	31	32	40	21	31	26	30	32
	(2)	kPa	41	35	38	47	25	36	30	36	38
Hydraulic module											
Volume of the buffer tank		l	165	165	165	200	200	450	450	450	450
Volume of the expansion vessel		l	5	5	5	18	18	18	18	18	18
Pump model (STD)			P2	P2	P3	P4	P4	P5	P7	P7	P9
Available discharge head (1P)	(1)	kPa	145	135	162	133	148	168	177	165	172
Available discharge head (2P)	(1)	kPa	137	125	149	117	128	136	162	147	149
Pump model (OVS)			P6	P6	P6	P6	P6	P8	P8	P8	P11
Available discharge head (1PM)	(1)	kPa	255	237	233	218	232	322	320	298	295
Available discharge head (2PM)	(1)	kPa	247	227	221	202	212	291	305	280	271
Pump model (GLY)			P15	P15	P16	P16	P16	P17	P17	P18	P18
Available discharge head (1PG)	(1)	kPa	120	124	168	150	174	153	153	158	146
Available discharge head (2PG)	(1)	kPa	105	105	143	138	158	146	143	146	132
Noise levels											
Sound power level (-)	(3)	dB(A)	91	91	91	90	91	92	92	92	94
Sound pressure level (-)	(4)	dB(A)	75	75	75	73	74	74	74	74	76
Sound power level (LN)	(3)	dB(A)	89	89	89	88	89	90	90	90	92
Sound pressure level (LN)	(4)	dB(A)	73	73	73	71	72	72	72	72	74
Basic dimensions											
Length	(7)	mm	1.750	1.750	1.750	2.200	2.200	3.200	3.200	3.200	3.200
Depth		mm	1.000	1.000	1.000	1.000	1.000	1.100	1.100	1.100	1.100
Height		mm	1.260	1.260	1.260	1.600	1.600	1.600	1.600	1.600	1.600

1. External air temperature 35°C; user-side heat exchanger inlet-outlet water temperature 12-7°C. Values compliant with standard EN 14511
2. External air temperature 7°C DB, 6°C WB; user-side heat exchanger inlet-outlet water temperature 40-45°C. Values compliant with standard EN 14511
3. Sound power levels calculated according to ISO 3744
4. Sound pressure levels measured at a distance of 1 metre from the unit in free field and directivity factor Q=4
5. The reading refers to the basic unit with microchannel coils
6. The reading refers to the basic unit with Cu/Al coils
7. The reading refers to the unit without pumps, tank or recovery Refer to the specific dimensional drawing if the unit is configured

TECHNICAL SPECIFICATIONS - BETA REV

Unit Size			13.2	15.2	16.2	14.4	16.4	18.4	20.4	24.4
BETA REV										
Cooling (A35; W7)										
Refrigeration capacity	(1)	kW	125	146	159	137	153	189	208	233
Absorbed power	(1)	kW	53	56	64	50	61	67	77	90
EER	(1)		2,36	2,63	2,47	2,74	2,53	2,81	2,69	2,59
ESEER			3,43	3,67	3,62	3,89	3,74	3,88	3,85	3,79
BETA REV /HP										
Cooling (A35; W7)										
Refrigeration capacity	(1)	kW	123	141	153	132	148	182	199	224
Absorbed power	(1)	kW	54	58	67	52	63	70	81	94
EER	(1)		2,28	2,45	2,28	2,56	2,36	2,60	2,45	2,40
ESEER			3,15	3,61	3,49	3,78	3,54	3,80	3,68	3,64
Heating (A7; W45)										
Heating capacity	(2)	kW	133	153	168	143	162	194	212	237
Absorbed power	(2)	kW	48	52	57	48	55	66	73	85
COP	(2)		2,75	2,97	2,94	3,01	2,98	2,94	2,90	2,79
Compressors										
Quantity/Refrigerant circuits		n°/n°	2/1	2/1	2/1	4/2	4/2	4/2	4/2	4/2
Minimum capacity reduction step		%	50%	45%	50%	25%	25%	21%	25%	22%
Refrigerant charge (CH)	(5)	kg	10	16	16	16	16	25	25	25
Refrigerant charge (HP)	(6)	kg	26	40	40	43	44	56	56	56
Fans										
Quantity		n°	3	3	3	3	3	4	4	4
Air flow rate BETA REV		m³/h	36.000	40.000	40.000	40.000	40.000	57.000	58.950	70.000
Available pressure rated/maximum		Pa	50 / 250	50 / 250	50 / 250	50 / 250	50 / 250	50 / 250	50 / 250	50 / 250
User-side heat exchanger										
Quantity			1	1	1	2	2	2	2	2
Water flow rate BETA REV	(1)	m³/h	21,6	25,3	27,5	23,6	26,5	32,7	35,9	40,3
Head losses BETA REV	(1)	kPa	39	35	41	23	28	29	35	34
Water flow rate BETA REV /HP	(1)	m³/h	21,2	24,4	26,4	22,8	25,6	31,5	34,3	38,7
	(2)	m³/h	22,7	26,2	28,8	24,6	27,8	33,3	36,3	40,6
Head losses BETA REV /HP	(1)	kPa	37	32	37	21	26	26	31	31
	(2)	kPa	45	39	46	25	32	31	37	36
Hydraulic module										
Volume of the buffer tank		l	450	390	390	390	390	700	700	700
Volume of the expansion vessel		l	18	18	18	18	18	18	18	18
Pump model (STD)			P9	P9	P10	P9	P10	P10	P10	P13
Available discharge head (1P)	(1)	kPa	160	157	184	170	194	176	153	218
Available discharge head (2P)	(1)	kPa	133	120	140	138	153	156	129	188
Pump model (OVS)			P11	P11	P11	P11	P12	P12	P12	P14
Available discharge head (1PM)	(1)	kPa	283	279	334	292	344	324	300	281
Available discharge head (2PM)	(1)	kPa	256	242	290	260	303	304	276	250
Pump model (GLY)			P19	P19	P19	P18	P19	P19	P20	P20
Available discharge head (1PG)	(1)	kPa	175	169	148	142	159	126	192	171
Available discharge head (2PG)	(1)	kPa	157	157	133	131	145	118	182	159
Noise levels										
Sound power level (-)	(3)	dB(A)	94	94	95	94	95	95	97	98
Sound pressure level (-)	(4)	dB(A)	76	75	76	75	76	76	78	79
Sound power level (LN)	(3)	dB(A)	92	92	93	92	93	93	95	96
Sound pressure level (LN)	(4)	dB(A)	74	73	74	73	74	74	76	77
Basic dimensions										
Length	(7)	mm	3.200	3.200	3.200	3.200	3.200	4.200	4.200	4.200
Depth		mm	1.100	1.100	1.100	1.100	1.100	1.100	1.100	1.100
Height		mm	1.600	2.100	2.100	2.100	2.100	2.100	2.100	2.100

1. External air temperature 35°C; user-side heat exchanger inlet-outlet water temperature 12-7°C. Values compliant with standard EN 14511
2. External air temperature 7°C DB, 6°C WB; user-side heat exchanger inlet-outlet water temperature 40-45°C. Values compliant with standard EN 14511
3. Sound power levels calculated according to ISO 3744
4. Sound pressure levels measured at a distance of 1 metre from the unit in free field and directivity factor Q=4
5. The reading refers to the basic unit with microchannel coils
6. The reading refers to the basic unit with Cu/Al coils
7. The reading refers to the unit without pumps, tank or recovery Refer to the specific dimensional drawing if the unit is configured

Blue Box reserves the right to alter specifications.

TECHNICAL SPECIFICATIONS - BETA REV RFE

Unit Size			3.2	4.2	5.2	6.2	7.2	8.2	9.2	10.2	12.2
BETA REV RFE											
Cooling (A35; W7)											
Refrigeration capacity	(1)	kW	40	45	53	60	67	81	93	102	116
Absorbed power	(1)	kW	15	17	21	22	25	28	33	38	42
EER	(1)		2,78	2,61	2,58	2,75	2,63	2,90	2,85	2,71	2,75
ESEER			4,02	3,98	3,95	3,94	3,85	4,10	4,05	3,91	3,90
BETA REV RFE /HP											
Cooling (A35; W7)											
Refrigeration capacity	(1)	kW	40	45	52	59	66	80	90	98	114
Absorbed power	(1)	kW	15	18	20	22	26	29	34	39	43
EER	(1)		2,70	2,54	2,60	2,65	2,56	2,81	2,69	2,49	2,64
ESEER			4,00	3,94	3,97	3,92	3,76	3,97	3,90	3,76	3,84
Heating (A7; W45)											
Heating capacity	(2)	kW	42	47	55	63	70	84	95	104	122
Absorbed power	(2)	kW	14	16	18	21	23	28	31	35	40
COP	(2)		2,96	2,89	3,01	3,02	3,05	3,03	3,04	3,00	3,07
Compressors											
Quantity/Refrigerant circuits		n°/n°	2/1	2/1	2/1	2/1	2/1	2/1	2/1	2/1	2/1
Minimum capacity reduction step		%	50%	50%	50%	50%	50%	50%	43%	50%	44%
Refrigerant charge (CH)	(5)	kg	4	4	4	6	6	9	9	9	10
Refrigerant charge (HP)	(6)	kg	11	12	12	17	18	23	26	26	26
Fans											
Quantity		n°	2	2	2	2	2	3	3	3	3
Air flow rate BETA REV RFE		m³/h	17.000	17.000	15.000	19.000	19.000	28.500	28.500	28.500	36.000
Available pressure rated/maximum		Pa	50 / 250	50 / 250	50 / 250	50 / 250	50 / 250	50 / 250	50 / 250	50 / 250	50 / 250
User-side heat exchanger											
Quantity			1	1	1	1	1	1	1	1	1
Water flow rate BETA REV RFE	(1)	m³/h	7,0	7,8	9,2	10,3	11,5	14,0	16,0	17,6	20,1
Head losses BETA REV RFE	(1)	kPa	38	33	33	42	22	33	28	34	34
Water flow rate BETA REV RFE /HP	(1)	m³/h	6,9	7,7	9,0	10,1	11,4	13,8	15,6	16,9	19,7
	(2)	m³/h	7,2	8,1	9,5	10,8	12,0	14,3	16,2	17,8	20,8
Head losses BETA REV RFE /HP	(1)	kPa	35	31	32	40	21	31	26	30	32
	(2)	kPa	41	35	38	47	25	36	30	36	38
Hydraulic module											
Volume of the buffer tank		l	165	165	165	200	200	450	450	450	450
Volume of the expansion vessel		l	5	5	5	18	18	18	18	18	18
Pump model (STD)			P2	P2	P3	P4	P4	P5	P7	P7	P9
Available discharge head (1P)	(1)	kPa	145	135	162	133	148	168	177	165	172
Available discharge head (2P)	(1)	kPa	137	125	149	117	128	136	162	147	149
Pump model (OVS)			P6	P6	P6	P6	P6	P8	P8	P8	P11
Available discharge head (1PM)	(1)	kPa	255	237	233	218	232	322	320	298	295
Available discharge head (2PM)	(1)	kPa	247	227	221	202	212	291	305	280	271
Pump model (GLY)			P15	P15	P16	P16	P16	P17	P17	P18	P18
Available discharge head (1PG)	(1)	kPa	120	124	168	150	174	153	153	158	146
Available discharge head (2PG)	(1)	kPa	105	105	143	138	158	146	143	146	132
Noise levels											
Sound power level (-)	(3)	dB(A)	89	89	89	89	89	91	91	91	94
Sound pressure level (-)	(4)	dB(A)	72	72	72	72	72	73	73	73	76
Sound power level (LN)	(3)	dB(A)	87	87	87	87	87	89	89	89	92
Sound pressure level (LN)	(4)	dB(A)	70	70	70	70	70	71	71	71	74
Basic dimensions											
Length	(7)	mm	1.750	1.750	1.750	2.200	2.200	3.200	3.200	3.200	3.200
Depth		mm	1.000	1.000	1.000	1.000	1.000	1.100	1.100	1.100	1.100
Height		mm	1.780	1.780	1.780	2.120	2.120	2.120	2.120	2.120	2.120

1. External air temperature 35°C; user-side heat exchanger inlet-outlet water temperature 12-7°C. Values compliant with standard EN 14511
2. External air temperature 7°C DB, 6°C WB; user-side heat exchanger inlet-outlet water temperature 40-45°C. Values compliant with standard EN 14511
3. Sound power levels calculated according to ISO 3744
4. Sound pressure levels measured at a distance of 1 metre from the unit in free field and directivity factor Q=4
5. The reading refers to the basic unit with microchannel coils
6. The reading refers to the basic unit with Cu/Al coils
7. The reading refers to the unit without pumps, tank or recovery Refer to the specific dimensional drawing if the unit is configured

TECHNICAL SPECIFICATIONS - BETA REV RFE

Unit Size			13.2	15.2	16.2	14.4	16.4	18.4	20.4	24.4
BETA REV RFE										
Cooling (A35; W7)										
Refrigeration capacity	(1)	kW	125	146	159	137	153	189	208	233
Absorbed power	(1)	kW	48	54	63	49	59	63	73	86
EER	(1)		2,58	2,69	2,52	2,81	2,58	3,02	2,85	2,72
ESEER			3,73	3,82	3,75	4,12	3,95	4,12	3,97	3,90
BETA REV RFE /HP										
Cooling (A35; W7)										
Refrigeration capacity	(1)	kW	123	141	153	132	148	182	199	224
Absorbed power	(1)	kW	49	56	66	50	62	65	77	89
EER	(1)		2,48	2,51	2,33	2,62	2,41	2,79	2,59	2,51
ESEER			3,63	3,76	3,60	3,99	3,90	3,90	3,78	3,75
Heating (A7; W45)										
Heating capacity	(2)	kW	133	153	168	143	162	194	212	237
Absorbed power	(2)	kW	44	50	56	46	53	61	69	81
COP	(2)		3,03	3,05	3,01	3,10	3,05	3,16	3,07	2,94
Compressors										
Quantity/Refrigerant circuits		n°/n°	2/1	2/1	2/1	4/2	4/2	4/2	4/2	4/2
Minimum capacity reduction step		%	50%	45%	50%	25%	25%	21%	25%	22%
Refrigerant charge (CH)	(5)	kg	10	16	16	16	16	25	25	25
Refrigerant charge (HP)	(6)	kg	26	40	40	43	44	56	56	56
Fans										
Quantity		n°	3	3	3	3	3	5	5	5
Air flow rate BETA REV RFE		m³/h	36.000	40.000	40.000	40.000	40.000	57.000	58.950	70.000
Available pressure rated/maximum		Pa	50 / 250	50 / 250	50 / 250	50 / 250	50 / 250	50 / 250	50 / 250	50 / 150
User-side heat exchanger										
Quantity			1	1	1	2	2	2	2	2
Water flow rate BETA REV RFE	(1)	m³/h	21,6	25,3	27,5	23,6	26,5	32,7	35,9	40,3
Head losses BETA REV RFE	(1)	kPa	39	35	41	23	28	29	35	34
Water flow rate BETA REV RFE /HP	(1)	m³/h	21,2	24,4	26,4	22,8	25,6	31,5	34,3	38,7
	(2)	m³/h	22,7	26,2	28,8	24,6	27,8	33,3	36,3	40,6
Head losses BETA REV RFE /HP	(1)	kPa	37	32	37	21	26	26	31	31
	(2)	kPa	45	39	46	25	32	31	37	36
Hydraulic module										
Volume of the buffer tank		l	450	390	390	390	390	700	700	700
Volume of the expansion vessel		l	18	18	18	18	18	18	18	18
Pump model (STD)			P9	P9	P10	P9	P10	P10	P10	P13
Available discharge head (1P)	(1)	kPa	160	157	184	170	194	176	153	218
Available discharge head (2P)	(1)	kPa	133	120	140	138	153	156	129	188
Pump model (OVS)			P11	P11	P11	P11	P12	P12	P12	P14
Available discharge head (1PM)	(1)	kPa	283	279	334	292	344	324	300	281
Available discharge head (2PM)	(1)	kPa	256	242	290	260	303	304	276	250
Pump model (GLY)			P19	P19	P19	P18	P19	P19	P20	P20
Available discharge head (1PG)	(1)	kPa	175	169	148	142	159	126	192	171
Available discharge head (2PG)	(1)	kPa	157	157	133	131	145	118	182	159
Noise levels										
Sound power level (-)	(3)	dB(A)	94	94	94	93	93	96	97	98
Sound pressure level (-)	(4)	dB(A)	76	76	76	75	75	77	78	79
Sound power level (LN)	(3)	dB(A)	92	92	92	91	91	94	95	96
Sound pressure level (LN)	(4)	dB(A)	74	74	74	73	73	75	76	77
Basic dimensions										
Length	(7)	mm	3.200	3.200	3.200	3.200	3.200	4.200	4.200	4.200
Depth		mm	1.100	1.100	1.100	1.100	1.100	1.100	1.100	1.100
Height		mm	2.120	2.150	2.150	2.150	2.150	2.150	2.150	2.150

1. External air temperature 35°C; user-side heat exchanger inlet-outlet water temperature 12-7°C. Values compliant with standard EN 14511
2. External air temperature 7°C DB, 6°C WB; user-side heat exchanger inlet-outlet water temperature 40-45°C. Values compliant with standard EN 14511
3. Sound power levels calculated according to ISO 3744
4. Sound pressure levels measured at a distance of 1 metre from the unit in free field and directivity factor Q=4
5. The reading refers to the basic unit with microchannel coils
6. The reading refers to the basic unit with Cu/Al coils
7. The reading refers to the unit without pumps, tank or recovery Refer to the specific dimensional drawing if the unit is configured

Blue Box reserves the right to alter specifications.

TECHNICAL SPECIFICATIONS - BETA REV RFA

Unit Size			3.2	4.2	5.2	6.2	7.2	8.2	9.2	10.2	12.2
BETA REV RFA											
Cooling (A35; W7)											
Refrigeration capacity	(1)	kW	40	45	53	60	67	81	93	102	116
Absorbed power	(1)	kW	15	18	21	22	26	29	34	39	44
EER	(1)		2,63	2,49	2,47	2,67	2,56	2,80	2,77	2,64	2,65
ESEER			3,80	3,76	3,70	3,82	3,77	3,85	3,84	3,75	3,82
BETA REV RFA /HP											
Cooling (A35; W7)											
Refrigeration capacity	(1)	kW	40	45	52	59	66	80	90	98	114
Absorbed power	(1)	kW	16	18	21	23	26	30	35	40	45
EER	(1)		2,56	2,43	2,49	2,58	2,50	2,71	2,61	2,43	2,54
ESEER			3,77	3,73	3,70	3,79	3,71	3,82	3,75	3,63	3,70
Heating (A7; W45)											
Heating capacity	(2)	kW	42	47	55	63	70	84	95	104	122
Absorbed power	(2)	kW	15	17	19	22	24	29	32	36	41
COP	(2)		2,80	2,75	2,87	2,93	2,96	2,92	2,94	2,91	2,94
Compressors											
Quantity/Refrigerant circuits		n°/n°	2/1	2/1	2/1	2/1	2/1	2/1	2/1	2/1	2/1
Minimum capacity reduction step		%	50%	50%	50%	50%	50%	50%	43%	50%	44%
Refrigerant charge (CH)	(5)	kg	4	4	4	6	6	9	9	9	10
Refrigerant charge (HP)	(6)	kg	11	12	12	17	18	23	26	26	26
Fans											
Quantity		n°	2	2	2	2	2	3	3	3	4
Air flow rate BETA REV RFA		m³/h	17.000	17.000	15.000	19.000	19.000	28.500	28.500	28.500	36.000
Available pressure rated/maximum		Pa	50 / 250	50 / 250	50 / 250	50 / 150	50 / 150	50 / 150	50 / 150	50 / 150	50 / 150
User-side heat exchanger											
Quantity			1	1	1	1	1	1	1	1	1
Water flow rate BETA REV RFA	(1)	m³/h	7,0	7,8	9,2	10,3	11,5	14,0	16,0	17,6	20,1
Head losses BETA REV RFA	(1)	kPa	38	33	33	42	22	33	28	34	34
Water flow rate BETA REV RFA /HP	(1)	m³/h	6,9	7,7	9,0	10,1	11,4	13,8	15,6	16,9	19,7
	(2)	m³/h	7,2	8,1	9,5	10,8	12,0	14,3	16,2	17,8	20,8
Head losses BETA REV RFA /HP	(1)	kPa	35	31	32	40	21	31	26	30	32
	(2)	kPa	41	35	38	47	25	36	30	36	38
Hydraulic module											
Volume of the buffer tank		l	165	165	165	200	200	450	450	450	450
Volume of the expansion vessel		l	5	5	5	18	18	18	18	18	18
Pump model (STD)			P2	P2	P3	P4	P4	P5	P7	P7	P9
Available discharge head (1P)	(1)	kPa	145	135	162	133	148	168	177	165	172
Available discharge head (2P)	(1)	kPa	137	125	149	117	128	136	162	147	149
Pump model (OVS)			P6	P6	P6	P6	P6	P8	P8	P8	P11
Available discharge head (1PM)	(1)	kPa	255	237	233	218	232	322	320	298	295
Available discharge head (2PM)	(1)	kPa	247	227	221	202	212	291	305	280	271
Pump model (GLY)			P15	P15	P16	P16	P16	P17	P17	P18	P18
Available discharge head (1PG)	(1)	kPa	120	124	168	150	174	153	153	158	146
Available discharge head (2PG)	(1)	kPa	105	105	143	138	158	146	143	146	132
Noise levels											
Sound power level (-)	(3)	dB(A)	90	90	90	90	90	92	92	92	94
Sound pressure level (-)	(4)	dB(A)	73	74	74	73	73	74	74	74	76
Sound power level (LN)	(3)	dB(A)	88	88	88	88	88	90	90	90	92
Sound pressure level (LN)	(4)	dB(A)	71	72	72	71	71	72	72	72	74
Basic dimensions											
Length	(7)	mm	1.750	1.750	1.750	2.200	2.200	3.200	3.200	3.200	3.200
Depth		mm	1.000	1.000	1.000	1.000	1.000	1.100	1.100	1.100	1.100
Height		mm	1.780	1.780	1.780	2.120	2.120	2.120	2.120	2.120	2.120

1. External air temperature 35°C; user-side heat exchanger inlet-outlet water temperature 12-7°C. Values compliant with standard EN 14511
2. External air temperature 7°C DB, 6°C WB; user-side heat exchanger inlet-outlet water temperature 40-45°C. Values compliant with standard EN 14511
3. Sound power levels calculated according to ISO 3744
4. Sound pressure levels measured at a distance of 1 metre from the unit in free field and directivity factor Q=4
5. The reading refers to the basic unit with microchannel coils
6. The reading refers to the basic unit with Cu/Al coils
7. The reading refers to the unit without pumps, tank or recovery Refer to the specific dimensional drawing if the unit is configured

TECHNICAL SPECIFICATIONS - BETA REV RFA

Unit Size			13.2	15.2	16.2	14.4	16.4
BETA REV RFA							
Cooling (A35; W7)							
Refrigeration capacity	(1)	kW	125	146	159	137	153
Absorbed power	(1)	kW	50	56	64	50	61
EER	(1)		2,50	2,62	2,47	2,73	2,53
ESEER			3,57	3,69	3,65	3,92	3,76
BETA REV RFA /HP							
Cooling (A35; W7)							
Refrigeration capacity	(1)	kW	123	141	153	132	148
Absorbed power	(1)	kW	51	58	67	52	63
EER	(1)		2,40	2,45	2,28	2,55	2,35
ESEER			3,40	3,65	3,53	3,82	3,57
Heating (A7; W45)							
Heating capacity	(2)	kW	133	153	168	143	162
Absorbed power	(2)	kW	46	52	57	48	55
COP	(2)		2,92	2,97	2,94	3,01	2,97
Compressors							
Quantity/Refrigerant circuits		n°/n°	2/1	2/1	2/1	4/2	4/2
Minimum capacity reduction step		%	50%	45%	50%	25%	25%
Refrigerant charge (CH)	(5)	kg	10	16	16	16	16
Refrigerant charge (HP)	(6)	kg	26	40	40	43	44
Fans							
Quantity		n°	4	4	4	4	4
Air flow rate BETA REV RFA		m³/h	36.000	40.000	40.000	40.000	40.000
Available pressure rated/maximum		Pa	50 / 150	50 / 100	50 / 100	50 / 100	50 / 100
User-side heat exchanger							
Quantity			1	1	1	2	2
Water flow rate BETA REV RFA	(1)	m³/h	21,6	25,3	27,5	23,6	26,5
Head losses BETA REV RFA	(1)	kPa	39	35	41	23	28
Water flow rate BETA REV RFA /HP	(1)	m³/h	21,2	24,4	26,4	22,8	25,6
	(2)	m³/h	22,7	26,2	28,8	24,6	27,8
Head losses BETA REV RFA /HP	(1)	kPa	37	32	37	21	26
	(2)	kPa	45	39	46	25	32
Hydraulic module							
Volume of the buffer tank		l	450	390	390	390	390
Volume of the expansion vessel		l	18	18	18	18	18
Pump model (STD)			P9	P9	P10	P9	P10
Available discharge head (1P)	(1)	kPa	160	157	184	170	194
Available discharge head (2P)	(1)	kPa	133	120	140	138	153
Pump model (OVS)			P11	P11	P11	P11	P12
Available discharge head (1PM)	(1)	kPa	283	279	334	292	344
Available discharge head (2PM)	(1)	kPa	256	242	290	260	303
Pump model (GLY)			P19	P19	P19	P18	P19
Available discharge head (1PG)	(1)	kPa	175	169	148	142	159
Available discharge head (2PG)	(1)	kPa	157	157	133	131	145
Noise levels							
Sound power level (-)	(3)	dB(A)	94	94	94	93	93
Sound pressure level (-)	(4)	dB(A)	76	76	76	75	75
Sound power level (LN)	(3)	dB(A)	92	92	92	91	91
Sound pressure level (LN)	(4)	dB(A)	74	74	74	73	73
Basic dimensions							
Length	(7)	mm	3.200	3.200	3.200	3.200	3.200
Depth		mm	1.100	1.100	1.100	1.100	1.100
Height		mm	2.120	2.150	2.150	2.150	2.150

1. External air temperature 35°C; user-side heat exchanger inlet-outlet water temperature 12-7°C. Values compliant with standard EN 14511
2. External air temperature 7°C DB, 6°C WB; user-side heat exchanger inlet-outlet water temperature 40-45°C. Values compliant with standard EN 14511
3. Sound power levels calculated according to ISO 3744
4. Sound pressure levels measured at a distance of 1 metre from the unit in free field and directivity factor Q=4
5. The reading refers to the basic unit with microchannel coils
6. The reading refers to the basic unit with Cu/Al coils
7. The reading refers to the unit without pumps, tank or recovery Refer to the specific dimensional drawing if the unit is configured

Blue Box reserves the right to alter specifications.

TECHNICAL SPECIFICATIONS -BETA REV LE

Unit Size			3.2	4.2	5.2	6.2	7.2	8.2	9.2	10.2	12.2
BETA REV											
Cooling (A35; W7)											
Refrigeration capacity	(1)	kW	46	51	58	68	73	92	104	115	131
Absorbed power	(1)	kW	18	21	23	23	27	30	35	41	49
EER	(1)		2,61	2,49	2,52	2,90	2,69	3,05	2,95	2,83	2,69
BETA REV /HP											
Cooling (A35; W7)											
Refrigeration capacity	(1)	kW	45	51	59	67	73	92	102	111	129
Absorbed power	(1)	kW	18	21	23	24	28	31	37	43	50
EER	(1)		2,54	2,42	2,61	2,80	2,60	2,97	2,79	2,57	2,57
Heating (A7; W45)											
Heating capacity	(2)	kW	42	47	55	65	72	87	96	104	123
Absorbed power	(2)	kW	14	16	16	18	20	24	27	30	37
COP	(2)		2,98	2,98	3,38	3,64	3,66	3,62	3,57	3,49	3,29
Compressors											
Quantity/Refrigerant circuits		n°/n°	2/1	2/1	2/1	2/1	2/1	2/1	2/1	2/1	2/1
Minimum capacity reduction step		%	50%	50%	50%	50%	50%	50%	43%	50%	44%
Fans											
Quantity		n°	1	1	1	2	2	3	3	3	3
Air flow rate BETA REV		m³/h	17.000	17.000	15.000	19.000	19.000	28.500	28.500	28.500	36.000
Available pressure rated/maximum		Pa	50 / 250	50 / 250	50 / 250	50 / 250	50 / 250	50 / 250	50 / 250	50 / 250	50 / 250
Noise levels											
Sound power level (-)	(3)	dB(A)	91	91	91	90	91	92	92	92	94
Sound pressure level (-)	(4)	dB(A)	75	75	75	73	74	74	74	74	76
Sound power level (LN)	(3)	dB(A)	89	89	89	88	89	90	90	90	92
Sound pressure level (LN)	(4)	dB(A)	73	73	73	71	72	72	72	72	74
Basic dimensions											
Length		mm	1.750	1.750	1.750	2.200	2.200	3.200	3.200	3.200	3.200
Depth		mm	1.000	1.000	1.000	1.000	1.000	1.100	1.100	1.100	1.100
Height		mm	1.260	1.260	1.260	1.600	1.600	1.600	1.600	1.600	1.600

Unit Size			13.2	15.2	16.2	14.4	16.4	18.4	20.4	24.4
BETA REV										
Cooling (A35; W7)										
Refrigeration capacity	(1)	kW	140	164	178	153	171	210	235	263
Absorbed power	(1)	kW	55	58	68	53	64	70	81	94
EER	(1)		2,54	2,82	2,61	2,91	2,68	2,98	2,90	2,79
BETA REV /HP										
Cooling (A35; W7)										
Refrigeration capacity	(1)	kW	138	159	169	148	165	206	224	252
Absorbed power	(1)	kW	57	61	71	55	66	74	86	99
EER	(1)		2,44	2,60	2,38	2,71	2,48	2,79	2,60	2,54
Heating (A7; W45)										
Heating capacity	(2)	kW	133	155	168	145	163	196	213	237
Absorbed power	(2)	kW	41	43	47	39	45	56	61	72
COP	(2)		3,27	3,62	3,57	3,68	3,60	3,53	3,48	3,31
Compressors										
Quantity/Refrigerant circuits		n°/n°	2/1	2/1	2/1	4/2	4/2	4/2	4/2	4/2
Minimum capacity reduction step		%	50%	45%	50%	25%	25%	21%	25%	22%
Fans										
Quantity		n°	3	3	3	3	3	4	4	4
Air flow rate BETA REV		m³/h	36.000	40.000	40.000	40.000	40.000	57.000	58.950	70.000
Available pressure rated/maximum		Pa	50 / 250	50 / 250	50 / 250	50 / 250	50 / 250	50 / 250	50 / 250	50 / 250
Noise levels										
Sound power level (-)	(3)	dB(A)	94	94	95	94	95	95	97	98
Sound pressure level (-)	(4)	dB(A)	76	75	76	75	76	76	78	79
Sound power level (LN)	(3)	dB(A)	92	92	93	92	93	93	95	96
Sound pressure level (LN)	(4)	dB(A)	74	73	74	73	74	74	76	77
Basic dimensions										
Length		mm	3.200	3.200	3.200	3.200	3.200	4.200	4.200	4.200
Depth		mm	1.100	1.100	1.100	1.100	1.100	1.100	1.100	1.100
Height		mm	1.600	2.100	2.100	2.100	2.100	2.100	2.100	2.100

1. External air temperature 35°C; evaporating temperature 7.5°C
2. External air temperature 7°C DB, 6°C WB; condensing temperature 40°C
3. Sound power levels calculated according to ISO 3744
4. Sound pressure levels measured at a distance of 1 metre from the unit in free field and directivity factor Q=4

TECHNICAL SPECIFICATIONS - BETA REV SLN

Unit Size			3.2	4.2	5.2	6.2	7.2	8.2	9.2	10.2	12.2	13.2	15.2	16.2	14.4	16.4
BETA REV SLN																
Cooling (A35; W7)																
Refrigeration capacity	(1)	kW	41	46	52	62	71	83	94	106	117	137	154	170	142	162
Absorbed power	(1)	kW	14	17	20	20	24	29	34	37	43	46	53	61	48	58
EER	(1)		2,91	2,74	2,62	3,05	2,96	2,91	2,82	2,89	2,74	2,99	2,89	2,77	2,92	2,78
ESEER			3,98	3,93	3,87	4,02	3,97	3,99	3,87	3,91	3,80	3,82	3,78	3,72	4,00	3,93
BETA REV SLN/HP																
Cooling (A35; W7)																
Refrigeration capacity	(1)	kW	39	44	50	60	68	81	92	102	112	132	148	163	137	157
Absorbed power	(1)	kW	15	18	21	21	24	29	34	38	44	47	54	63	49	59
EER	(1)		2,58	2,42	2,42	2,87	2,78	2,82	2,71	2,71	2,55	2,83	2,73	2,60	2,80	2,65
ESEER			3,69	3,62	3,79	3,96	3,90	3,91	3,83	3,78	3,73	3,76	3,70	3,65	3,92	3,86
Heating (A7; W45)																
Heating capacity	(2)	kW	42	49	56	64	71	89	100	110	124	143	161	179	149	171
Absorbed power	(2)	kW	14	16	18	20	22	28	31	34	38	45	50	56	46	53
COP	(2)		2,98	3,03	3,16	3,19	3,20	3,22	3,21	3,21	3,24	3,21	3,21	3,23	3,22	3,22
Compressors																
Quantity/Refrigerant circuits		n°/n°	2/1	2/1	2/1	2/1	2/1	2/1	2/1	2/1	2/1	2/1	2/1	2/1	4/2	4/2
Minimum capacity reduction step		%	50%	50%	50%	50%	50%	50%	43%	50%	44%	50%	45%	50%	25%	25%
Refrigerant charge (CH)	(5)	kg	6	6	6	10	10	10	10	15	16	24	24	25	25	25
Refrigerant charge (HP)	(6)	kg	12	13	17	28	28	28	28	41	41	55	55	55	57	57
Fans																
Quantity		n°	2	2	2	3	3	3	3	3	3	4	4	4	4	4
Air flow rate BETA REV SLN		m³/h	13.000	13.000	13.000	19.500	19.500	32.000	32.000	32.000	32.000	48.000	48.000	48.000	48.000	48.000
Available pressure rated/maximum		Pa	50/250	50/250	50/250	50/250	50/250	50/250	50/250	50/250	50/250	50/250	50/250	50/250	50/250	50/250
User-side heat exchanger																
Quantity			1	1	1	1	1	1	1	1	1	1	1	1	2	2
Water flow rate BETA REV SLN	(1)	m³/h	7,0	8,0	9,1	10,8	12,2	14,4	16,3	18,4	20,3	23,6	26,6	29,3	24,4	28,0
Head losses BETA REV SLN	(1)	kPa	22	20	25	25	31	43	39	49	45	39	47	43	32	39
Water flow rate BETA REV SLN/HP	(1)	m³/h	6,8	7,6	8,6	10,4	11,7	14,0	15,9	17,7	19,4	22,8	25,6	28,2	23,7	27,1
	(2)	m³/h	7,2	8,3	9,5	10,9	12,1	15,2	17,1	18,8	21,3	24,5	27,5	30,7	25,5	29,3
Head losses BETA REV SLN/HP	(1)	kPa	21	19	23	24	28	41	37	45	42	37	43	40	30	37
	(2)	kPa	23	20	27	24	31	45	41	49	47	39	49	45	33	42
Hydraulic module																
Volume of the buffer tank (CH)		l	200	200	200	200	200	450	450	450	450	700	700	700	700	700
Volume of the buffer tank (HP)		l	165	165	200	200	200	450	450	450	450	700	700	700	700	700
Volume of the expansion vessel		l	5	5	18	18	18	18	18	18	18	18	18	18	18	18
Pump model (STD)			P2	P2	P3	P4	P4	P5	P7	P7	P9	P9	P9	P10	P9	P10
Available discharge head (1P)	(1)	kPa	145	128	146	141	136	159	159	143	159	160	141	174	156	175
Available discharge head (2P)	(1)	kPa	136	116	131	120	126	145	142	121	132	148	126	156	143	158
Pump model (OVS)			P6	P6	P6	P6	P6	P8	P8	P8	P11	P11	P11	P12	P11	P12
Available discharge head (1PM)	(1)	kPa	247	244	234	226	220	311	295	264	281	282	263	323	278	324
Available discharge head (2PM)	(1)	kPa	238	232	219	204	210	297	278	242	254	270	248	305	265	307
Pump model (GLY)			P15	P15	P16	P16	P16	P17	P17	P18	P18	P19	P19	P19	P18	P19
Available discharge head (1PG)	(1)	kPa	142	141	176	171	153	130	126	124	121	165	138	126	112	121
Available discharge head (2PG)	(1)	kPa	135	132	164	166	146	121	115	116	112	160	132	118	107	114
Noise levels																
Sound power level	(3)	dB(A)	85	85	86	86	87	88	88	88	90	90	90	91	90	91
Sound pressure level	(4)	dB(A)	68	68	69	68	69	70	70	70	71	71	71	72	71	72
Basic dimensions BETA REV SLN																
Length	(7)	mm	2.200	2.200	2.200	3.200	3.200	3.200	3.200	3.200	3.200	4.200	4.200	4.200	4.200	4.200
Depth		mm	1.000	1.000	1.000	1.100	1.100	1.100	1.100	1.100	1.100	1.100	1.100	1.100	1.100	1.100
Height		mm	1.600	1.600	1.600	1.600	1.600	1.600	1.600	2.100	2.100	2.100	2.100	2.100	2.100	2.100
Basic dimensions BETA REV SLN/HP																
Length	(7)	mm	1.750	1.750	2.200	3.200	3.200	3.200	3.200	3.200	3.200	4.200	4.200	4.200	4.200	4.200
Depth		mm	1.000	1.000	1.000	1.100	1.100	1.100	1.100	1.100	1.100	1.100	1.100	1.100	1.100	1.100
Height		mm	1.260	1.260	1.600	1.600	1.600	1.600	1.600	2.100	2.100	2.100	2.100	2.100	2.100	2.100

1. External air temperature 35°C; user-side heat exchanger inlet-outlet water temperature 12-7°C. Values compliant with standard EN 14511
2. External air temperature 7°C DB, 6°C WB; user-side heat exchanger inlet-outlet water temperature 40-45°C. Values compliant with standard EN 14511
3. Sound power levels calculated according to ISO 3744
4. Sound pressure levels measured at a distance of 1 metre from the unit in free field and directivity factor Q=4
5. The reading refers to the basic unit with microchannel coils
6. The reading refers to the basic unit with Cu/Al coils
7. The reading refers to the unit without pumps, tank or recovery Refer to the specific dimensional drawing if the unit is configured

TECHNICAL SPECIFICATIONS - BETA REV RFE SLN

Unit Size			3.2	4.2	5.2	6.2	7.2	8.2	9.2	10.2	12.2	13.2	15.2	16.2	14.4	16.4
BETA REV RFE SLN																
Cooling (A35; W7)																
Refrigeration capacity	(1)	kW	41	46	52	62	71	83	94	106	117	137	154	170	142	162
Absorbed power	(1)	kW	14	17	20	20	24	28	33	36	42	44	52	60	47	57
EER	(1)		2,96	2,78	2,65	3,10	3,00	3,01	2,90	2,94	2,77	3,10	2,98	2,85	3,02	2,85
ESEER			4,10	4,01	3,99	4,15	4,05	4,10	4,03	4,05	3,92	4,10	4,06	3,96	4,17	4,03
BETA REV RFE SLN/HP																
Cooling (A35; W7)																
Refrigeration capacity	(1)	kW	39	44	50	60	68	81	92	102	112	132	148	163	137	157
Absorbed power	(1)	kW	14	17	20	21	24	28	33	37	43	45	53	61	48	58
EER	(1)		2,78	2,57	2,44	2,91	2,81	2,91	2,79	2,75	2,58	2,93	2,81	2,67	2,89	2,73
ESEER			3,99	3,92	3,90	4,07	3,96	4,06	3,94	3,94	3,83	3,99	3,94	3,88	4,10	3,95
Heating (A7; W45)																
Heating capacity	(2)	kW	42	49	56	64	71	89	100	110	124	143	161	179	149	171
Absorbed power	(2)	kW	13	15	17	20	22	27	30	34	38	43	49	54	45	52
COP	(2)		3,23	3,24	3,20	3,24	3,25	3,33	3,31	3,26	3,29	3,33	3,31	3,32	3,34	3,32
Compressors																
Quantity/Refrigerant circuits		n°/n°	2/1	2/1	2/1	2/1	2/1	2/1	2/1	2/1	2/1	2/1	2/1	2/1	4/2	4/2
Minimum capacity reduction step		%	50%	50%	50%	50%	50%	50%	43%	50%	44%	50%	45%	50%	25%	25%
Refrigerant charge (CH)	(5)	kg	6	6	6	10	10	10	10	15	16	24	24	25	25	25
Refrigerant charge (HP)	(6)	kg	12	13	17	28	28	28	28	41	41	55	55	55	57	57
Fans																
Quantity		n°	2	2	2	3	3	3	3	3	3	5	5	5	5	5
Air flow rate BETA REV RFE SLN		m³/h	13.000	13.000	13.000	19.500	19.500	32.000	32.000	32.000	32.000	48.000	48.000	48.000	48.000	48.000
Available pressure rated/maximum		Pa	50/250	50/250	50/250	50/250	50/250	50/250	50/250	50/250	50/250	50/250	50/250	50/250	50/250	50/250
User-side heat exchanger																
Quantity			1	1	1	1	1	1	1	1	1	1	1	1	2	2
Water flow rate BETA REV RFE SLN	(1)	m³/h	7,0	8,0	9,1	10,8	12,2	14,4	16,3	18,4	20,3	23,6	26,6	29,3	24,4	28,0
Head losses BETA REV RFE SLN	(1)	kPa	22	20	25	25	31	43	39	49	45	39	47	43	32	39
Water flow rate BETA REV RFE SLN/	(1)	m³/h	6,8	7,6	8,6	10,4	11,7	14,0	15,9	17,7	19,4	22,8	25,6	28,2	23,7	27,1
HP	(2)	m³/h	7,2	8,3	9,5	10,9	12,1	15,2	17,1	18,8	21,3	24,5	27,5	30,7	25,5	29,3
Head losses BETA REV RFE SLN/HP	(1)	kPa	21	19	23	24	28	41	37	45	42	37	43	40	30	37
	(2)	kPa	23	20	27	24	31	45	41	49	47	39	49	45	33	42
Hydraulic module																
Volume of the buffer tank (CH)		l	200	200	200	200	200	450	450	450	450	700	700	700	700	700
Volume of the buffer tank (HP)		l	165	165	200	200	200	450	450	450	450	700	700	700	700	700
Volume of the expansion vessel		l	5	5	18	18	18	18	18	18	18	18	18	18	18	18
Pump model (STD)			P2	P2	P3	P4	P4	P5	P7	P7	P9	P9	P9	P10	P9	P10
Available discharge head (1P)	(1)	kPa	145	128	146	141	136	159	159	143	159	160	141	174	156	175
Available discharge head (2P)	(1)	kPa	136	116	131	120	126	145	142	121	132	148	126	156	143	158
Pump model (OVS)			P6	P6	P6	P6	P6	P8	P8	P8	P11	P11	P11	P12	P11	P12
Available discharge head (1PM)	(1)	kPa	247	244	234	226	220	311	295	264	281	282	263	323	278	324
Available discharge head (2PM)	(1)	kPa	238	232	219	204	210	297	278	242	254	270	248	305	265	307
Pump model (GLY)			P15	P15	P16	P16	P16	P17	P17	P18	P18	P19	P19	P19	P18	P19
Available discharge head (1PG)	(1)	kPa	142	141	176	171	153	130	126	124	121	165	138	126	112	121
Available discharge head (2PG)	(1)	kPa	135	132	164	166	146	121	115	116	112	160	132	118	107	114
Noise levels																
Sound power level	(3)	dB(A)	85	85	85	85	85	87	87	87	90	90	90	90	89	89
Sound pressure level	(4)	dB(A)	68	68	68	67	67	69	69	69	71	71	71	71	70	70
Basic dimensions BETA REV RFE SLN																
Length	(7)	mm	2.200	2.200	2.200	3.200	3.200	3.200	3.200	3.200	3.200	4.200	4.200	4.200	4.200	4.200
Depth		mm	1.000	1.000	1.000	1.100	1.100	1.100	1.100	1.100	1.100	1.100	1.100	1.100	1.100	1.100
Height		mm	2.120	2.120	2.120	2.120	2.120	2.120	2.120	2.150	2.150	2.150	2.150	2.150	2.150	2.150
Basic dimensions BETA REV RFE SLN/HP																
Length	(7)	mm	1.750	1.750	2.200	3.200	3.200	3.200	3.200	3.200	3.200	4.200	4.200	4.200	4.200	4.200
Depth		mm	1.000	1.000	1.000	1.100	1.100	1.100	1.100	1.100	1.100	1.100	1.100	1.100	1.100	1.100
Height		mm	1.780	1.780	2.120	2.120	2.120	2.120	2.120	2.150	2.150	2.150	2.150	2.150	2.150	2.150

1. External air temperature 35°C; user-side heat exchanger inlet-outlet water temperature 12-7°C. Values compliant with standard EN 14511
2. External air temperature 7°C DB, 6°C WB; user-side heat exchanger inlet-outlet water temperature 40-45°C. Values compliant with standard EN 14511
3. Sound power levels calculated according to ISO 3744
4. Sound pressure levels measured at a distance of 1 metre from the unit in free field and directivity factor Q=4
5. The reading refers to the basic unit with microchannel coils
6. The reading refers to the basic unit with Cu/Al coils
7. The reading refers to the unit without pumps, tank or recovery Refer to the specific dimensional drawing if the unit is configured

TECHNICAL SPECIFICATIONS - BETA REV RFA SLN

Unit Size			3.2	4.2	5.2	6.2	7.2	8.2	9.2	10.2	12.2
BETA REV RFA SLN											
Cooling (A35; W7)											
Refrigeration capacity	(1)	kW	41	46	52	62	71	83	94	106	117
Absorbed power	(1)	kW	15	18	21	22	25	30	34	38	44
EER	(1)		2,77	2,63	2,53	2,90	2,83	2,82	2,74	2,79	2,66
ESEER			3,91	3,90	3,80	3,97	3,94	3,99	3,86	3,86	3,76
BETA REV RFA SLN/HP											
Cooling (A35; W7)											
Refrigeration capacity	(1)	kW	39	44	50	60	68	81	92	102	112
Absorbed power	(1)	kW	15	18	21	22	26	30	35	39	45
EER	(1)		2,60	2,44	2,34	2,73	2,66	2,73	2,64	2,62	2,47
ESEER			3,71	3,64	3,68	3,88	3,84	3,89	3,81	3,74	3,70
Heating (A7; W45)											
Heating capacity	(2)	kW	42	49	56	64	71	89	100	110	124
Absorbed power	(2)	kW	14	16	18	21	23	29	32	36	40
COP	(2)		3,01	3,05	3,04	3,03	3,05	3,11	3,11	3,09	3,13
Compressors											
Quantity/Refrigerant circuits		n°/n°	2/1	2/1	2/1	2/1	2/1	2/1	2/1	2/1	2/1
Minimum capacity reduction step		%	50%	50%	50%	50%	50%	50%	43%	50%	44%
Refrigerant charge (CH)	(5)	kg	6	6	6	10	10	10	10	15	16
Refrigerant charge (HP)	(6)	kg	12	13	17	28	28	28	28	41	41
Fans											
Quantity		n°	2	2	2	3	3	4	4	4	4
Air flow rate BETA REV RFA SLN		m³/h	13.000	13.000	13.000	19.500	19.500	32.000	32.000	32.000	32.000
Available pressure rated/maximum		Pa	50/250	50/250	50/250	50/250	50/250	50/250	50/250	50/250	50/250
User-side heat exchanger											
Quantity			1	1	1	1	1	1	1	1	1
Water flow rate BETA REV RFA SLN	(1)	m³/h	7,0	8,0	9,1	10,8	12,2	14,4	16,3	18,4	20,3
Head losses BETA REV RFA SLN	(1)	kPa	22	20	25	25	31	43	39	49	45
Water flow rate BETA REV RFA SLN/HP	(1)	m³/h	6,8	7,6	8,6	10,4	11,7	14,0	15,9	17,7	19,4
	(2)	m³/h	7,2	8,3	9,5	10,9	12,1	15,2	17,1	18,8	21,3
Head losses BETA REV RFA SLN/HP	(1)	kPa	21	19	23	24	28	41	37	45	42
	(2)	kPa	23	20	27	24	31	45	41	49	47
Hydraulic module											
Volume of the buffer tank (CH)		l	200	200	200	200	200	450	450	450	450
Volume of the buffer tank (HP)		l	165	165	200	200	200	450	450	450	450
Volume of the expansion vessel		l	5	5	18	18	18	18	18	18	18
Pump model (STD)			P2	P2	P3	P4	P4	P5	P7	P7	P9
Available discharge head (1P)	(1)	kPa	145	128	146	141	136	159	159	143	159
Available discharge head (2P)	(1)	kPa	136	116	131	120	126	145	142	121	132
Pump model (OVS)			P6	P6	P6	P6	P6	P8	P8	P8	P11
Available discharge head (1PM)	(1)	kPa	247	244	234	226	220	311	295	264	281
Available discharge head (2PM)	(1)	kPa	238	232	219	204	210	297	278	242	254
Pump model (GLY)			P15	P15	P16	P16	P16	P17	P17	P18	P18
Available discharge head (1PG)	(1)	kPa	142	141	176	171	153	130	126	124	121
Available discharge head (2PG)	(1)	kPa	135	132	164	166	146	121	115	116	112
Noise levels											
Sound power level	(3)	dB(A)	86	86	86	86	86	88	88	88	90
Sound pressure level	(4)	dB(A)	69	69	69	68	68	70	70	70	71
Basic dimensions BETA REV RFA SLN											
Length	(7)	mm	2.200	2.200	2.200	3.200	3.200	3.200	3.200	3.200	3.200
Depth		mm	1.000	1.000	1.000	1.100	1.100	1.100	1.100	1.100	1.100
Height		mm	2.120	2.120	2.120	2.120	2.120	2.120	2.120	2.150	2.150
Basic dimensions BETA REV RFA SLN/HP											
Length	(7)	mm	1.750	1.750	2.200	3.200	3.200	3.200	3.200	3.200	3.200
Depth		mm	1.000	1.000	1.000	1.100	1.100	1.100	1.100	1.100	1.100
Height		mm	1.780	1.780	2.120	2.120	2.120	2.120	2.120	2.150	2.150

1. External air temperature 35°C; user-side heat exchanger inlet-outlet water temperature 12-7°C. Values compliant with standard EN 14511
2. External air temperature 7°C DB, 6°C WB; user-side heat exchanger inlet-outlet water temperature 40-45°C. Values compliant with standard EN 14511
3. Sound power levels calculated according to ISO 3744
4. Sound pressure levels measured at a distance of 1 metre from the unit in free field and directivity factor Q=4
5. The reading refers to the basic unit with microchannel coils
6. The reading refers to the basic unit with Cu/Al coils
7. The reading refers to the unit without pumps, tank or recovery Refer to the specific dimensional drawing if the unit is configured

Blue Box reserves the right to alter specifications.

ELECTRICAL SPECIFICATIONS - BETA REV - BETA REV LE

Unit Size			3.2	4.2	5.2	6.2	7.2	8.2	9.2	10.2
Max. absorbed power		kW	23,5	25,7	28,0	30,8	35,2	43,4	49,9	56,4
Max. absorbed current		A	41,1	46,7	50,4	56,2	61,0	75,9	82,1	88,3
Max. inrush current		A	128	140	148	151	176	220	271	277
Max. inrush current with soft-starter		A	87	96	101	104	120	150	181	187
Power supply		V/ph/Hz	400/3~/50							
Power supply for auxiliary circuits		V/ph/Hz	230-24/1~/50							
Fans electrical data										
Nominal power of standard fan		n° x kW	1 x 5,5	1 x 5,5	1 x 5,5	2 x 2,2	2 x 2,2	3 x 2,2	3 x 2,2	3 x 2,2
Nominal current of standard fan		n° x A	1 x 11,9	1 x 11,9	1 x 11,9	2 x 5,1	2 x 5,1	3 x 5,1	3 x 5,1	3 x 5,1
Absorbed power of fan @50 Pa		n° x kW	1 x 4,4	1 x 4,4	1 x 3,3	2 x 1,5	2 x 1,5	3 x 1,5	3 x 1,5	3 x 1,5
Absorbed power of fan @100 Pa		n° x kW	1 x 4,7	1 x 4,7	1 x 3,5	2 x 1,7	2 x 1,7	3 x 1,7	3 x 1,7	3 x 1,7
Absorbed power of fan @150 Pa		n° x kW	1 x 5,0	1 x 5,0	1 x 3,8	2 x 1,8	2 x 1,8	3 x 1,8	3 x 1,8	3 x 1,8
Absorbed power of fan @200 Pa		n° x kW	1 x 5,3	1 x 5,3	1 x 4,9	2 x 2,0	2 x 2,0	3 x 2,0	3 x 2,0	3 x 2,0
Absorbed power of fan @250 Pa		n° x kW	1 x 5,5	1 x 5,5	1 x 4,4	2 x 2,2	2 x 2,2	3 x 2,2	3 x 2,2	3 x 2,2

Unit Size			12.2	13.2	15.2	16.2	14.4	16.4	18.4	20.4	24.4
Max. absorbed power		kW	64,6	70,4	75,3	82,6	68,1	80,2	98,6	111,6	127,2
Max. absorbed current		A	102,4	110,5	119,2	133,9	116,9	136,5	162,0	174,4	198,2
Max. inrush current		A	330	338	370	385	232	280	351	363	426
Max. inrush current with soft-starter		A	221	229	246	261	176	211	261	273	317
Power supply		V/ph/Hz	400/3~/50								
Power supply for auxiliary circuits		V/ph/Hz	230-24/1~/50								
Fans electrical data											
Nominal power of standard fan		n° x kW	3 x 3,0	3 x 3,0	3 x 2,2	3 x 2,2	3 x 2,2	3 x 2,2	4 x 3,0	4 x 3,0	4 x 4,0
Nominal current of standard fan		n° x A	3 x 7,1	3 x 7,1	3 x 5,1	3 x 5,1	3 x 5,1	3 x 5,1	4 x 7,1	4 x 7,1	4 x 9,0
Absorbed power of fan @50 Pa		n° x kW	3 x 2,9	3 x 2,9	3 x 2,1	3 x 2,1	3 x 2,1	3 x 2,1	4 x 2,7	4 x 2,7	4 x 3,6
Absorbed power of fan @100 Pa		n° x kW	3 x 3,1	3 x 3,1	3 x 2,3	3 x 2,3	3 x 2,3	3 x 2,3	4 x 2,7	4 x 2,9	4 x 4,6
Absorbed power of fan @150 Pa		n° x kW	3 x 3,3	3 x 3,3	3 x 2,6	3 x 2,6	3 x 2,6	3 x 2,6	4 x 3,0	4 x 3,2	4 x 4,9
Absorbed power of fan @200 Pa		n° x kW	3 x 3,5	3 x 3,5	3 x 2,9	3 x 2,9	3 x 2,9	3 x 2,9	4 x 3,3	4 x 3,5	4 x 5,2
Absorbed power of fan @250 Pa		n° x kW	3 x 3,7	3 x 3,7	3 x 3,0	3 x 3,0	3 x 3,0	3 x 3,0	4 x 3,5	4 x 3,8	4 x 5,5

ELECTRICAL SPECIFICATIONS - BETA REV RFE

Unit Size			3.2	4.2	5.2	6.2	7.2	8.2	9.2	10.2
Max. absorbed power		kW	23,8	26,0	29,8	32,2	36,6	45,5	52,0	58,5
Max. absorbed current		A	38,1	43,7	50,3	54,9	59,7	73,9	80,1	86,3
Max. inrush current		A	125	137	148	150	174	218	269	275
Max. inrush current with soft-starter		A	84	93	100	103	118	148	179	185
Power supply		V/ph/Hz	400/3~/50							
Power supply for auxiliary circuits		V/ph/Hz	230-24/1~/50							
Fans electrical data										
Nominal power of standard fan		n° x kW	2 x 2,9	2 x 2,9	2 x 2,9	2 x 2,9	2 x 2,9	3 x 2,9	3 x 2,9	3 x 2,9
Nominal current of standard fan		n° x A	2 x 4,4	2 x 4,4	2 x 4,4	2 x 4,4	2 x 4,4	3 x 4,4	3 x 4,4	3 x 4,4
Absorbed power of fan @50 Pa		n° x kW	2 x 1,0	2 x 1,0	2 x 0,8	2 x 1,1	2 x 1,1	3 x 1,1	3 x 1,1	3 x 1,1
Absorbed power of fan @100 Pa		n° x kW	2 x 1,1	2 x 1,1	2 x 0,9	2 x 1,3	2 x 1,3	3 x 1,3	3 x 1,3	3 x 1,3
Absorbed power of fan @150 Pa		n° x kW	2 x 1,2	2 x 1,2	2 x 1,1	2 x 1,4	2 x 1,4	3 x 1,4	3 x 1,4	3 x 1,4
Absorbed power of fan @200 Pa		n° x kW	2 x 1,4	2 x 1,4	2 x 1,2	2 x 1,6	2 x 1,6	3 x 1,6	3 x 1,6	3 x 1,6
Absorbed power of fan @250 Pa		n° x kW	2 x 1,6	2 x 1,6	2 x 1,3	2 x 1,8	2 x 1,8	3 x 1,8	3 x 1,8	3 x 1,8

Unit Size			12.2	13.2	15.2	16.2	14.4	16.4	18.4	20.4	24.4
Max. absorbed power		kW	63,7	69,5	76,8	84,1	69,6	81,7	100,1	113,1	124,7
Max. absorbed current		A	93,4	101,5	116,2	130,9	113,9	133,5	154,1	166,5	182,7
Max. inrush current		A	321	329	367	382	229	277	343	355	410
Max. inrush current with soft-starter		A	212	220	243	258	173	208	253	265	301
Power supply		V/ph/Hz	400/3~/50								
Power supply for auxiliary circuits		V/ph/Hz	230-24/1~/50								
Fans electrical data											
Nominal power of standard fan		n° x kW	3 x 2,7	3 x 2,7	3 x 2,7	3 x 2,7	3 x 2,7	3 x 2,7	5 x 2,7	5 x 2,7	5 x 2,7
Nominal current of standard fan		n° x A	3 x 4,1	3 x 4,1	3 x 4,1	3 x 4,1	3 x 4,1	3 x 4,1	5 x 4,1	5 x 4,1	5 x 4,1
Absorbed power of fan @50 Pa		n° x kW	3 x 1,4	3 x 1,4	3 x 1,6	3 x 1,6	3 x 1,6	3 x 1,6	5 x 1,2	5 x 1,3	5 x 2,0
Absorbed power of fan @100 Pa		n° x kW	3 x 1,6	3 x 1,6	3 x 1,9	3 x 1,9	3 x 1,9	3 x 1,9	5 x 1,4	5 x 1,5	5 x 2,2
Absorbed power of fan @150 Pa		n° x kW	3 x 1,8	3 x 1,8	3 x 2,1	3 x 2,1	3 x 2,1	3 x 2,1	5 x 1,6	5 x 1,7	5 x 2,4
Absorbed power of fan @200 Pa		n° x kW	3 x 2,0	3 x 2,0	3 x 2,3	3 x 2,3	3 x 2,3	3 x 2,3	5 x 1,8	5 x 1,9	-
Absorbed power of fan @250 Pa		n° x kW	3 x 2,2	3 x 2,2	3 x 2,5	3 x 2,5	3 x 2,5	3 x 2,5	5 x 2,0	5 x 2,1	-

ELECTRICAL SPECIFICATIONS - BETA REV RFA

Unit Size			3.2	4.2	5.2	6.2	7.2	8.2	9.2	10.2
Max. absorbed power		kW	21,9	24,1	27,9	30,3	34,7	42,7	49,2	55,7
Max. absorbed current		A	37,2	42,8	49,4	54,0	58,8	72,5	78,7	84,9
Max. inrush current		A	124	136	147	149	173	216	267	273
Max. inrush current with soft-starter		A	83	92	100	102	117	147	177	183
Power supply		V/ph/Hz	400/3~/50							
Power supply for auxiliary circuits		V/ph/Hz	230-24/1~/50							
Fans electrical data										
Nominal power of standard fan		n° x kW	2 x 2,0	2 x 2,0	2 x 2,0	2 x 2,0	2 x 2,0	3 x 2,0	3 x 2,0	3 x 2,0
Nominal current of standard fan		n° x A	2 x 4,0	2 x 4,0	2 x 4,0	2 x 4,0	2 x 4,0	3 x 4,0	3 x 4,0	3 x 4,0
Absorbed power of fan @50 Pa		n° x kW	2 x 1,4	2 x 1,4	2 x 1,2	2 x 1,5	2 x 1,5	3 x 1,5	3 x 1,5	3 x 1,5
Absorbed power of fan @100 Pa		n° x kW	2 x 1,5	2 x 1,5	2 x 1,4	2 x 1,6	2 x 1,6	3 x 1,6	3 x 1,6	3 x 1,6
Absorbed power of fan @150 Pa		n° x kW	2 x 1,6	2 x 1,6	2 x 1,5	2 x 1,7	2 x 1,7	3 x 1,7	3 x 1,7	3 x 1,7
Absorbed power of fan @200 Pa		n° x kW	2 x 1,7	2 x 1,7	2 x 1,6	-	-	-	-	-
Absorbed power of fan @250 Pa		n° x kW	2 x 1,9	2 x 1,9	2 x 1,7	-	-	-	-	-

Unit Size			12.2	13.2	15.2	16.2	14.4	16.4
Max. absorbed power		kW	63,4	69,2	76,5	83,8	69,3	81,4
Max. absorbed current		A	97,0	105,1	119,8	134,5	117,5	137,1
Max. inrush current		A	324	333	371	385	232	281
Max. inrush current with soft-starter		A	216	224	247	261	176	211
Power supply		V/ph/Hz	400/3~/50					
Power supply for auxiliary circuits		V/ph/Hz	230-24/1~/50					
Fans electrical data								
Nominal power of standard fan		n° x kW	4 x 2,0	4 x 2,0	4 x 2,0	4 x 2,0	4 x 2,0	4 x 2,0
Nominal current of standard fan		n° x A	4 x 4,0	4 x 4,0	4 x 4,0	4 x 4,0	4 x 4,0	4 x 4,0
Absorbed power of fan @50 Pa		n° x kW	4 x 1,5	4 x 1,5	4 x 1,6	4 x 1,6	4 x 1,6	4 x 1,6
Absorbed power of fan @100 Pa		n° x kW	4 x 1,6	4 x 1,6	4 x 1,7	4 x 1,7	4 x 1,7	4 x 1,7
Absorbed power of fan @150 Pa		n° x kW	4 x 1,7	4 x 1,7	-	-	-	-
Absorbed power of fan @200 Pa		n° x kW	-	-	-	-	-	-
Absorbed power of fan @250 Pa		n° x kW	-	-	-	-	-	-

Blue Box reserves the right to alter specifications.

ELECTRICAL SPECIFICATIONS - BETA REV SLN

Unit Size			3.2	4.2	5.2	6.2	7.2	8.2	9.2	10.2
Max. absorbed power		kW	22,4	24,6	28,4	33,0	37,4	43,4	49,9	56,4
Max. absorbed current		A	39,4	45,0	51,6	61,3	66,1	75,9	82,1	88,3
Max. inrush current		A	126	139	149	156	181	220	271	277
Max. inrush current with soft-starter		A	85	94	102	109	125	150	181	187
Power supply		V/ph/Hz	400/3~/50							
Power supply for auxiliary circuits		V/ph/Hz	230-24/1~/50							
Fans electrical data BETA REV SLN										
Nominal power of standard fan		n° x kW	2 x 2,2	2 x 2,2	2 x 2,2	3 x 2,2	3 x 2,2	3 x 2,2	3 x 2,2	3 x 2,2
Nominal current of standard fan		n° x A	2 x 5,1	2 x 5,1	2 x 5,1	3 x 5,1	3 x 5,1	3 x 5,1	3 x 5,1	3 x 5,1
Absorbed power of fan @50 Pa		n° x kW	2 x 0,6	2 x 0,6	2 x 0,6	3 x 0,6	3 x 0,6	3 x 1,3	3 x 1,3	3 x 1,2
Absorbed power of fan @100 Pa		n° x kW	2 x 0,7	2 x 0,7	2 x 0,7	3 x 0,7	3 x 0,7	3 x 1,4	3 x 1,4	3 x 1,4
Absorbed power of fan @150 Pa		n° x kW	2 x 0,9	2 x 0,9	2 x 0,9	3 x 0,9	3 x 0,9	3 x 1,6	3 x 1,6	3 x 1,6
Absorbed power of fan @200 Pa		n° x kW	2 x 1,0	2 x 1,0	2 x 1,0	3 x 1,0	3 x 1,0	3 x 1,8	3 x 1,8	3 x 1,8
Absorbed power of fan @250 Pa		n° x kW	2 x 1,1	2 x 1,1	2 x 1,1	3 x 1,1	3 x 1,1	3 x 1,9	3 x 1,9	3 x 2,0
Fans electrical data BETA REV SLN /HP										
Nominal power of standard fan		n° x kW	1 x 2,2	1 x 2,2	2 x 2,2	3 x 2,2	3 x 2,2	3 x 2,2	3 x 2,2	3 x 2,2
Nominal current of standard fan		n° x A	1 x 5,1	1 x 5,1	2 x 5,1	3 x 5,1	3 x 5,1	3 x 5,1	3 x 5,1	3 x 5,1
Absorbed power of fan @50 Pa		n° x kW	1 x 2,1	1 x 2,1	2 x 0,6	3 x 0,6	3 x 0,6	3 x 1,3	3 x 1,3	3 x 1,2
Absorbed power of fan @100 Pa		n° x kW	1 x 2,4	1 x 2,4	2 x 0,7	3 x 0,7	3 x 0,7	3 x 1,4	3 x 1,4	3 x 1,4
Absorbed power of fan @150 Pa		n° x kW	1 x 2,6	1 x 2,6	2 x 0,9	3 x 0,9	3 x 0,9	3 x 1,6	3 x 1,6	3 x 1,6
Absorbed power of fan @200 Pa		n° x kW	1 x 2,7	1 x 2,7	2 x 1,0	3 x 1,0	3 x 1,0	3 x 1,8	3 x 1,8	3 x 1,8
Absorbed power of fan @250 Pa		n° x kW	1 x 2,9	1 x 2,9	2 x 1,1	3 x 1,1	3 x 1,1	3 x 1,9	3 x 1,9	3 x 2,0

Unit Size			12.2	13.2	15.2	16.2	14.4	16.4
Max. absorbed power		kW	62,2	70,2	77,5	84,8	70,3	82,4
Max. absorbed current		A	96,4	109,6	124,3	139,0	122,0	141,6
Max. inrush current		A	324	337	375	390	237	285
Max. inrush current with soft-starter		A	215	228	251	266	181	216
Power supply		V/ph/Hz	400/3~/50					
Power supply for auxiliary circuits		V/ph/Hz	230-24/1~/50					
Fans electrical data BETA REV SLN								
Nominal power of standard fan		n° x kW	3 x 2,2	4 x 2,2	4 x 2,2	4 x 2,2	4 x 2,2	4 x 2,2
Nominal current of standard fan		n° x A	3 x 5,1	4 x 5,1	4 x 5,1	4 x 5,1	4 x 5,1	4 x 5,1
Absorbed power of fan @50 Pa		n° x kW	3 x 1,2	4 x 1,5	4 x 1,5	4 x 1,5	4 x 1,5	4 x 1,5
Absorbed power of fan @100 Pa		n° x kW	3 x 1,4	4 x 1,7	4 x 1,7	4 x 1,7	4 x 1,7	4 x 1,7
Absorbed power of fan @150 Pa		n° x kW	3 x 1,6	4 x 1,9	4 x 1,9	4 x 1,9	4 x 1,9	4 x 1,9
Absorbed power of fan @200 Pa		n° x kW	3 x 1,8	4 x 2,2	4 x 2,2	4 x 2,2	4 x 2,2	4 x 2,2
Absorbed power of fan @250 Pa		n° x kW	3 x 2,0	4 x 2,4	4 x 2,4	4 x 2,4	4 x 2,4	4 x 2,4
Fans electrical data BETA REV SLN /HP								
Nominal power of standard fan		n° x kW	3 x 2,2	4 x 2,2	4 x 2,2	4 x 2,2	4 x 2,2	4 x 2,2
Nominal current of standard fan		n° x A	3 x 5,1	4 x 5,1	4 x 5,1	4 x 5,1	4 x 5,1	4 x 5,1
Absorbed power of fan @50 Pa		n° x kW	3 x 1,2	4 x 1,5	4 x 1,5	4 x 1,5	4 x 1,5	4 x 1,5
Absorbed power of fan @100 Pa		n° x kW	3 x 1,4	4 x 1,7	4 x 1,7	4 x 1,7	4 x 1,7	4 x 1,7
Absorbed power of fan @150 Pa		n° x kW	3 x 1,6	4 x 1,9	4 x 1,9	4 x 1,9	4 x 1,9	4 x 1,9
Absorbed power of fan @200 Pa		n° x kW	3 x 1,8	4 x 2,2	4 x 2,2	4 x 2,2	4 x 2,2	4 x 2,2
Absorbed power of fan @250 Pa		n° x kW	3 x 2,0	4 x 2,4	4 x 2,4	4 x 2,4	4 x 2,4	4 x 2,4

ELECTRICAL SPECIFICATIONS - BETA REV RFE SLN

Unit Size			3.2	4.2	5.2	6.2	7.2	8.2	9.2	10.2
Max. absorbed power		kW	23,8	26,0	29,8	35,1	39,5	44,9	51,4	57,9
Max. absorbed current		A	38,1	43,7	50,3	59,3	64,1	72,9	79,1	85,3
Max. inrush current		A	125	137	148	154	179	217	268	274
Max. inrush current with soft-starter		A	84	93	100	107	123	147	178	184
Power supply		V/ph/Hz	400/3~/50							
Power supply for auxiliary circuits		V/ph/Hz	230-24/1~/50							
Fans electrical data										
Nominal power of standard fan		n° x kW	2 x 2,9	2 x 2,9	2 x 2,9	3 x 2,9	3 x 2,9	3 x 2,7	3 x 2,7	3 x 2,7
Nominal current of standard fan		n° x A	2 x 4,4	2 x 4,4	2 x 4,4	3 x 4,4	3 x 4,4	3 x 4,1	3 x 4,1	3 x 4,1
Absorbed power of fan @50 Pa		n° x kW	2 x 0,5	2 x 0,5	2 x 0,5	3 x 0,5	3 x 0,5	3 x 1,0	3 x 1,0	3 x 1,0
Absorbed power of fan @100 Pa		n° x kW	2 x 0,6	2 x 0,6	2 x 0,6	3 x 0,6	3 x 0,6	3 x 1,1	3 x 1,1	3 x 1,1
Absorbed power of fan @150 Pa		n° x kW	2 x 0,8	2 x 0,8	2 x 0,8	3 x 0,8	3 x 0,8	3 x 1,3	3 x 1,3	3 x 1,3
Absorbed power of fan @200 Pa		n° x kW	2 x 0,9	2 x 0,9	2 x 0,9	3 x 0,9	3 x 0,9	3 x 1,5	3 x 1,5	3 x 1,5
Absorbed power of fan @250 Pa		n° x kW	2 x 1,0	2 x 1,0	2 x 1,0	3 x 1,0	3 x 1,0	3 x 1,7	3 x 1,7	3 x 1,7

Unit Size			12.2	13.2	15.2	16.2	14.4	16.4
Max. absorbed power		kW	63,7	74,9	82,2	89,5	75,0	87,1
Max. absorbed current		A	93,4	109,7	124,4	139,1	122,1	141,7
Max. inrush current		A	321	337	375	390	237	285
Max. inrush current with soft-starter		A	212	228	251	266	181	216
Power supply		V/ph/Hz	400/3~/50					
Power supply for auxiliary circuits		V/ph/Hz	230-24/1~/50					
Fans electrical data								
Nominal power of standard fan		n° x kW	3 x 2,7	5 x 2,7	5 x 2,7	5 x 2,7	5 x 2,7	5 x 2,7
Nominal current of standard fan		n° x A	3 x 4,1	5 x 4,1	5 x 4,1	5 x 4,1	5 x 4,1	5 x 4,1
Absorbed power of fan @50 Pa		n° x kW	3 x 1,0	5 x 0,8	5 x 0,8	5 x 0,8	5 x 0,8	5 x 0,8
Absorbed power of fan @100 Pa		n° x kW	3 x 1,1	5 x 1,0	5 x 1,0	5 x 1,0	5 x 1,0	5 x 1,0
Absorbed power of fan @150 Pa		n° x kW	3 x 1,3	5 x 1,2	5 x 1,2	5 x 1,2	5 x 1,2	5 x 1,2
Absorbed power of fan @200 Pa		n° x kW	3 x 1,5	5 x 1,3	5 x 1,3	5 x 1,3	5 x 1,3	5 x 1,3
Absorbed power of fan @250 Pa		n° x kW	3 x 1,7	5 x 1,5	5 x 1,5	5 x 1,5	5 x 1,5	5 x 1,5

ELECTRICAL SPECIFICATIONS - BETA REV RFA SLN

Unit Size			3.2	4.2	5.2	6.2	7.2	8.2	9.2	10.2	12.2
Max. absorbed power		kW	21,9	24,1	27,9	32,3	36,6	44,6	51,1	57,6	63,4
Max. absorbed current		A	37,2	42,8	49,4	57,9	62,7	76,5	82,7	88,9	97,0
Max. inrush current		A	124	136	147	153	177	220	271	277	324
Max. inrush current with soft-starter		A	83	92	100	106	121	151	181	187	216
Power supply		V/ph/Hz	400/3~/50								
Power supply for auxiliary circuits		V/ph/Hz	230-24/1~/50								
Fans electrical data											
Nominal power of standard fan		n° x kW	2 x 2,0	2 x 2,0	2 x 2,0	3 x 2,0	3 x 2,0	4 x 2,0	4 x 2,0	4 x 2,0	4 x 2,0
Nominal current of standard fan		n° x A	2 x 4,0	2 x 4,0	2 x 4,0	3 x 4,0	3 x 4,0	4 x 4,0	4 x 4,0	4 x 4,0	4 x 4,0
Absorbed power of fan @50 Pa		n° x kW	2 x 1,0	2 x 1,0	2 x 1,0	3 x 1,0	3 x 1,0	4 x 1,2	4 x 1,2	4 x 1,2	4 x 1,2
Absorbed power of fan @100 Pa		n° x kW	2 x 1,1	2 x 1,1	2 x 1,1	3 x 1,1	3 x 1,1	4 x 1,3	4 x 1,3	4 x 1,3	4 x 1,3
Absorbed power of fan @150 Pa		n° x kW	2 x 1,3	2 x 1,3	2 x 1,3	3 x 1,3	3 x 1,3	4 x 1,5	4 x 1,5	4 x 1,5	4 x 1,5
Absorbed power of fan @200 Pa		n° x kW	2 x 1,4	2 x 1,4	2 x 1,4	3 x 1,4	3 x 1,4	4 x 1,6	4 x 1,6	4 x 1,6	4 x 1,6
Absorbed power of fan @250 Pa		n° x kW	2 x 1,5	2 x 1,5	2 x 1,5	3 x 1,5	3 x 1,5	4 x 1,7	4 x 1,7	4 x 1,7	4 x 1,7

Blue Box reserves the right to alter specifications.

RATED DATA FOR PUMPS

Model	Nominal power	Nominal current	Qmin	Qmax
	kW	A	m³/h	m³/h
P1	1,1	2,71	3	9
P2	0,9	2,1	3,6	9,6
P3	0,9	2,37	3,6	9,6
P4	1,1	2,45	7	18
P5	1,5	3,15	7	18
P6	1,9	4,24	7	18
P7	1,9	4,53	12	31,2
P8	3	6,1	6	20
P9	2,2	4,5	12	42
P10	3	6,1	12	42
P11	4	8,7	12	42
P12	5,5	10,4	12	42
P13	5,5	10,4	24	72
P14	7,5	13,7	24	72
P15	1,5	3,15	7	18
P16	1,9	4,24	7	18
P17	2,2	4,64	12	31,2
P18	3	6,1	12	42
P19	4	8,7	12	42
P20	7,5	13,7	24	72

BETA REV

Allowed flow rate range

	Q	Qmin	Qmax
	m³/h	m³/h	m³/h
3.2	7.0	3.5	10.5
4.2	7.8	3.9	11.7
5.2	9.2	4.6	13.7
6.2	10.3	5.2	15.5
7.2	11.5	5.8	17.3
8.2	14.0	7.0	21.0
9.2	16.0	8.0	24.0
10.2	17.6	8.8	26.4
12.2	20.1	10.0	30.1
13.2	21.6	10.8	32.4
15.2	25.3	12.6	37.9
16.2	27.5	13.7	41.2
14.4	23.6	11.8	35.4
16.4	26.5	13.2	39.7
18.4	32.7	16.3	49.0
20.4	35.9	17.9	53.8
24.4	40.3	20.1	60.4

BETA REV SLN

Allowed flow rate range

	Q	Qmin	Qmax
	m³/h	m³/h	m³/h
3.2	7.3	3.7	11.0
4.2	8.5	4.2	12.7
5.2	10.1	5.0	15.1
6.2	10.9	5.5	16.4
7.2	12.5	6.2	18.7
8.2	15.1	7.5	22.6
9.2	17.4	8.7	26.1
10.2	19.2	9.6	28.8
12.2	22.1	11.0	33.1
13.2	24.0	12.0	36.0
15.2	27.4	13.7	41.1
16.2	31.0	15.5	46.5
14.4	25.0	12.5	37.4
16.4	29.6	14.8	44.4

Blue Box reserves the right to alter specifications.

OPERATING LIMITS - BETA REV - BETA REV RFE - BETA REV RFA

COOLING

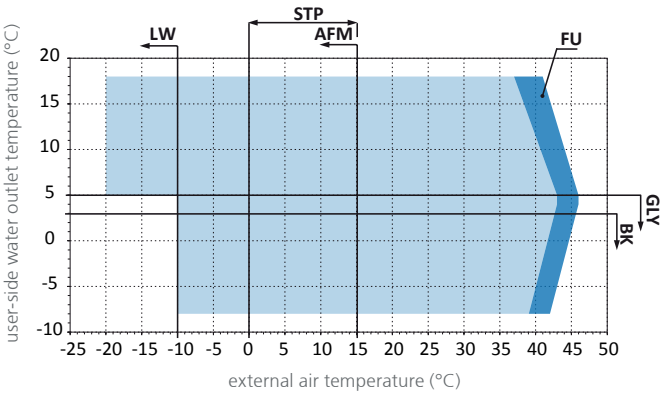

RECOVERY

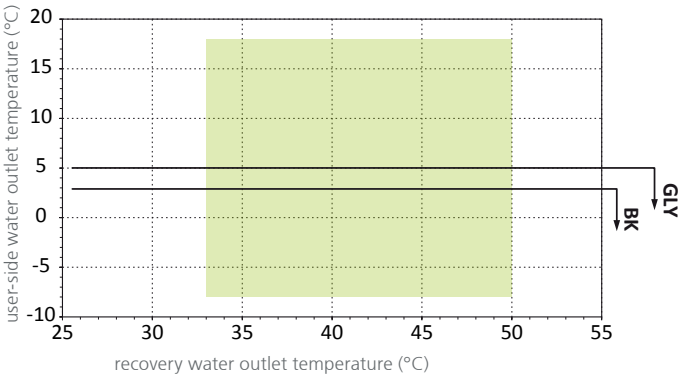

HEATING

valid for sizes
3.2, 4.2, 5.2, 6.2, 7.2, 8.2, 14.4, 16.4

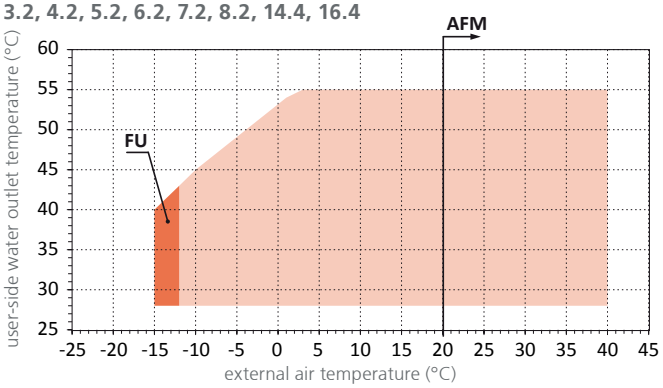

valid for sizes
9.2, 10.2, 16.2, 18.4, 20.4

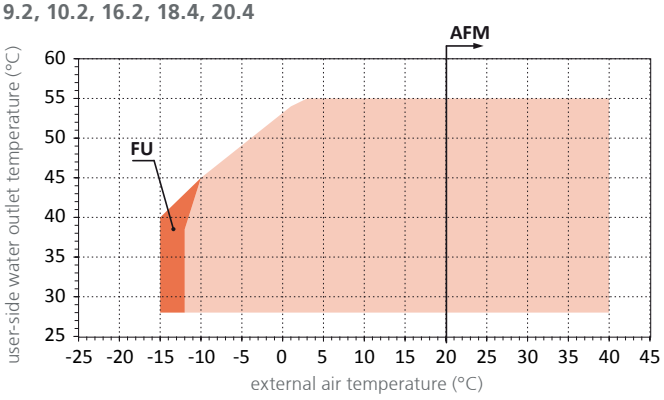

valid for sizes
12.2, 13.2, 15.2, 24.4

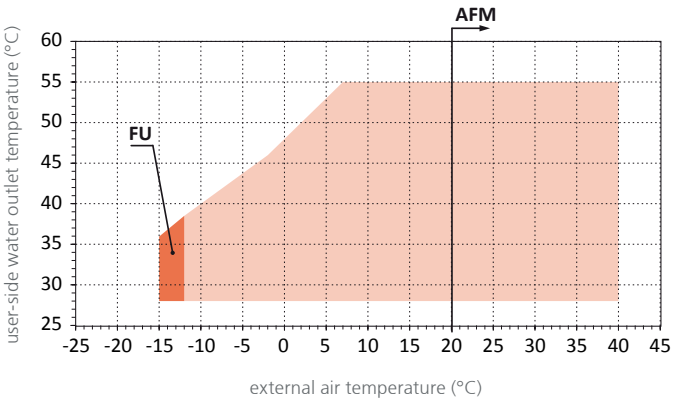

STP (Condensing control by steps): for external air temperatures of between +15°C and 0°C, the unit can work only if equipped with the "Condensing control by steps" accessory. For temperatures below 0°C, the unit can work only if fitted with the accessories indicated in the FSA note.
AFM (Air Flow Modulation): in the area indicated by the arrow, it is mandatory to include the "Condensing control with modulating damper" accessory. This limit doesn't apply to RFA or RFE units
LW (Less Wind): in the area indicated by the arrow, the unit can work only if there is no wind.
FU (Forced Unloading): in the indicated area, the control could actuate a forced capacity reduction of the compressors so as to prevent tripping of the safety devices.
INV (INVerter pump on user side): the use of the "Inverter pump on user side" accessory is allowed only in the area indicated by the arrow. For different conditions, please contact our sales department.
GLY (GLYcol): for SET point temperatures below 5°C, it is mandatory to use suitable percentages of antifreeze additives (glycols) to prevent ice formation in the exchanger.
BK (Brine Kit): for SET point temperatures below 3°C, it is mandatory to use the "Brine Kit" accessory.

OPERATING LIMITS - BETA REV LE

COOLING

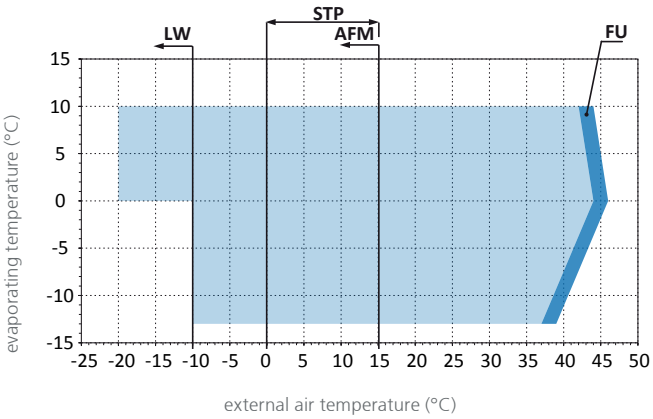

HEATING

valid for sizes
3.2, 4.2, 5.2, 6.2, 7.2, 8.2, 14.4, 16.4

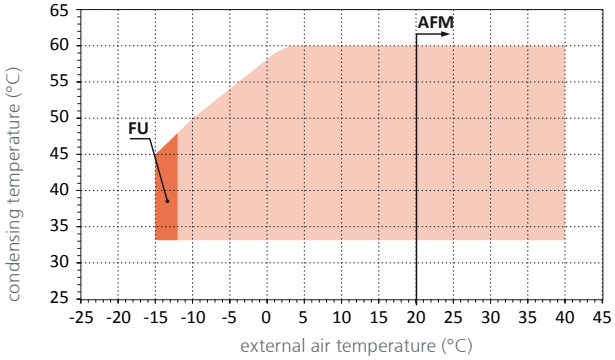

valid for sizes
9.2, 10.2, 16.2, 18.4, 20.4

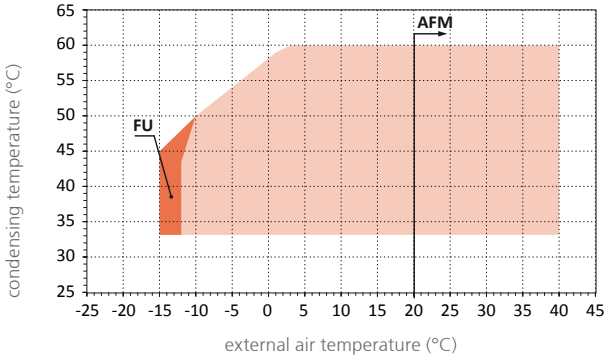

valid for sizes
12.2, 13.2, 15.2, 24.4

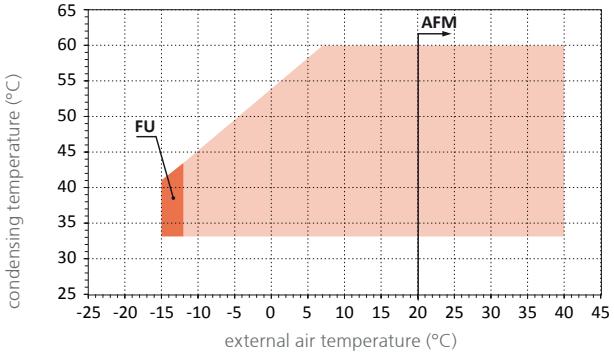

RECOVERY

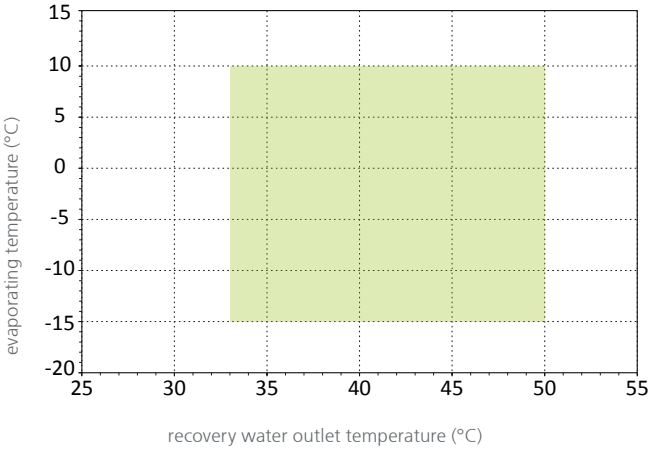

STP (Condensing control by steps): for external air temperatures of between +15°C and 0°C, the unit can work only if equipped with the "Condensing control by steps" accessory. For temperatures below 0°C, the unit can work only if fitted with the accessories indicated in the FSA note.
AFM (Air Flow Modulation): in the area indicated by the arrow, it is mandatory to include the "Condensing control with modulating damper" accessory. This limit doesn't apply to RFA or RFE units
LW (Less Wind): in the area indicated by the arrow, the unit can work only if there is no wind.
FU (Forced Unloading): in the indicated area, the control could actuate a forced capacity reduction of the compressors so as to prevent tripping of the safety devices.
INV (INVerter pump on user side): the use of the "Inverter pump on user side" accessory is allowed only in the area indicated by the arrow. For different conditions, please contact our sales department.
GLY (GLYcol): for SET point temperatures below 5°C, it is mandatory to use suitable percentages of antifreeze additives (glycols) to prevent ice formation in the exchanger.
BK (Brine Kit): for SET point temperatures below 3°C, it is mandatory to use the "Brine Kit" accessory.

Blue Box reserves the right to alter specifications.

OPERATING LIMITS - BETA REV SLN - BETA REV RFE SLN - BETA REV RFA SLN

COOLING

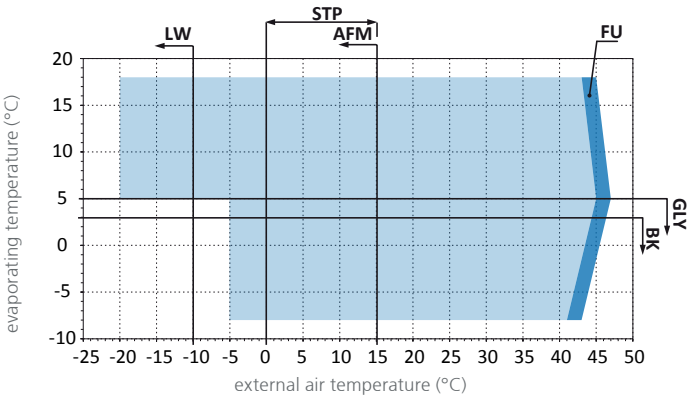

HEATING

valid for sizes
3.2, 4.2, 5.2, 6.2, 7.2, 8.2, 14.4, 16.4

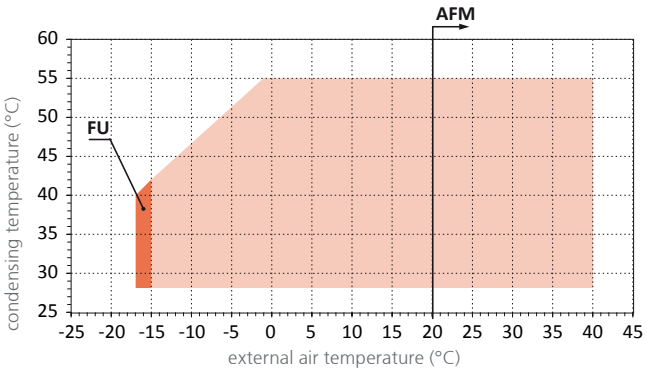

RECOVERY

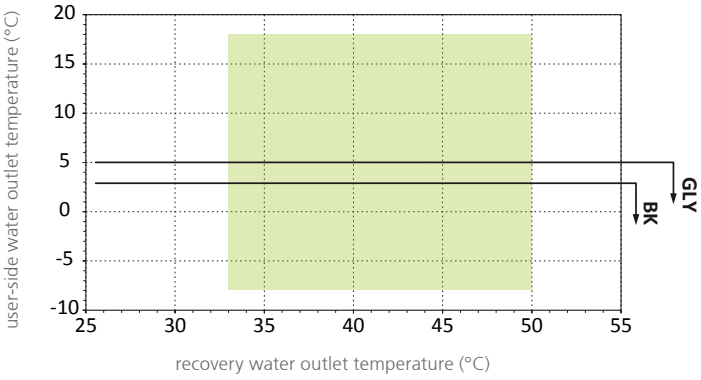

valid for sizes
9.2, 10.2, 16.2

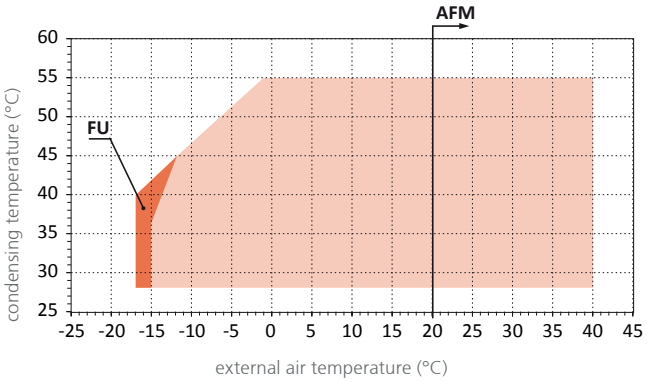

valid for sizes
12.2, 13.2, 15.2, 24.4

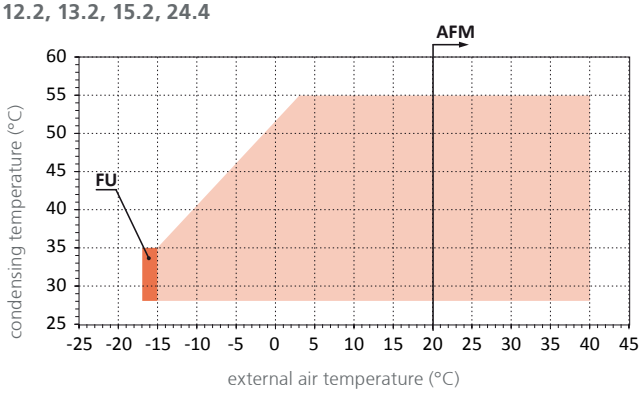

STP (Condensing control by steps): for external air temperatures of between +15°C and 0°C, the unit can work only if equipped with the "Condensing control by steps" accessory. For temperatures below 0°C, the unit can work only if fitted with the accessories indicated in the FSA note.
AFM (Air Flow Modulation): in the area indicated by the arrow, it is mandatory to include the "Condensing control with modulating damper" accessory. This limit doesn't apply to RFA or RFE units
LW (Less Wind): in the area indicated by the arrow, the unit can work only if there is no wind.
FU (Forced Unloading): in the indicated area, the control could actuate a forced capacity reduction of the compressors so as to prevent tripping of the safety devices.
INV (INVerter pump on user side): the use of the "Inverter pump on user side" accessory is allowed only in the area indicated by the arrow. For different conditions, please contact our sales department.
GLY (GLYcol): for SET point temperatures below 5°C, it is mandatory to use suitable percentages of antifreeze additives (glycols) to prevent ice formation in the exchanger.
BK (Brine Kit): for SET point temperatures below 3°C, it is mandatory to use the "Brine Kit" accessory.

VERSIONS THAT ARE NOT POSSIBLE - BETA REV

	CHILLER ONLY											HEAT PUMP						
	Basic	/1P /2P	/1PS /2PS	DS	/DS /1P /DS /2P	/DS /1PS	/DS /2PS	DC	/DC /1P /DC /2P	/DC /1PS	/DC /2PS	HP	HP /1P HP /2P	HP /1PS HP /2PS	HP /DS	HP /DS /1P HP /DS /2P	HP /DS /1PS	HP /DS /2PS
3.2							n.a.				n.a.							n.a.
4.2							n.a.				n.a.							n.a.
5.2							n.a.				n.a.							n.a.
6.2						n.a.	n.a.			n.a.	n.a.						n.a.	n.a.
7.2						n.a.	n.a.			n.a.	n.a.						n.a.	n.a.
8.2						n.a.	n.a.			n.a.	n.a.						n.a.	n.a.
9.2						n.a.	n.a.			n.a.	n.a.						n.a.	n.a.
10.2						n.a.	n.a.			n.a.	n.a.						n.a.	n.a.
12.2						n.a.	n.a.			n.a.	n.a.						n.a.	n.a.
13.2						n.a.	n.a.			n.a.	n.a.						n.a.	n.a.
15.2						n.a.	n.a.		n.a.	n.a.	n.a.						n.a.	n.a.
16.2						n.a.	n.a.		n.a.	n.a.	n.a.						n.a.	n.a.
14.4						n.a.	n.a.		n.a.	n.a.	n.a.					n.a.	n.a.	n.a.
16.4						n.a.	n.a.		n.a.	n.a.	n.a.					n.a.	n.a.	n.a.
18.4						n.a.	n.a.		n.a.	n.a.	n.a.						n.a.	n.a.
20.4						n.a.	n.a.		n.a.	n.a.	n.a.						n.a.	n.a.
24.4						n.a.	n.a.		n.a.	n.a.	n.a.						n.a.	n.a.

VERSIONS THAT ARE NOT POSSIBLE - BETA REV RFE

	CHILLER ONLY											HEAT PUMP						
	Basic	/1P /2P	/1PS /2PS	DS	/DS /1P /DS /2P	/DS /1PS	/DS /2PS	DC	/DC /1P /DC /2P	/DC /1PS	/DC /2PS	HP	HP /1P HP /2P	HP /1PS HP /2PS	HP /DS	HP /DS /1P HP /DS /2P	HP /DS /1PS	HP /DS /2PS
3.2							n.a.				n.a.							n.a.
4.2							n.a.				n.a.							n.a.
5.2							n.a.				n.a.							n.a.
6.2						n.a.	n.a.			n.a.	n.a.						n.a.	n.a.
7.2						n.a.	n.a.			n.a.	n.a.						n.a.	n.a.
8.2						n.a.	n.a.			n.a.	n.a.						n.a.	n.a.
9.2						n.a.	n.a.			n.a.	n.a.						n.a.	n.a.
10.2						n.a.	n.a.			n.a.	n.a.						n.a.	n.a.
12.2						n.a.	n.a.			n.a.	n.a.						n.a.	n.a.
13.2						n.a.	n.a.			n.a.	n.a.						n.a.	n.a.
15.2					n.a.	n.a.	n.a.		n.a.	n.a.	n.a.					n.a.	n.a.	n.a.
16.2					n.a.	n.a.	n.a.		n.a.	n.a.	n.a.					n.a.	n.a.	n.a.
14.4					n.a.	n.a.	n.a.		n.a.	n.a.	n.a.				n.a.	n.a.	n.a.	n.a.
16.4					n.a.	n.a.	n.a.		n.a.	n.a.	n.a.				n.a.	n.a.	n.a.	n.a.
18.4					n.a.	n.a.	n.a.		n.a.	n.a.	n.a.					n.a.	n.a.	n.a.
20.4					n.a.	n.a.	n.a.		n.a.	n.a.	n.a.					n.a.	n.a.	n.a.
24.4					n.a.	n.a.	n.a.		n.a.	n.a.	n.a.					n.a.	n.a.	n.a.

n.a.= Version not possible

Blue Box reserves the right to alter specifications.

VERSIONS THAT ARE NOT POSSIBLE - BETA REV RFA

	CHILLER ONLY											HEAT PUMP						
	Basic	/1P /2P	/1PS /2PS	DS	/DS /1P /DS /2P	/DS /1PS	/DS /2PS	DC	/DC /1P /DC /2P	/DC /1PS	/DC /2PS	HP	HP /1P HP /2P	HP /1PS HP /2PS	HP /DS	HP /DS /1P HP /DS /2P	HP /DS /1PS	HP /DS /2PS
3.2							n.a.				n.a.							n.a.
4.2							n.a.				n.a.							n.a.
5.2							n.a.				n.a.							n.a.
6.2						n.a.	n.a.			n.a.	n.a.						n.a.	n.a.
7.2						n.a.	n.a.			n.a.	n.a.						n.a.	n.a.
8.2						n.a.	n.a.			n.a.	n.a.						n.a.	n.a.
9.2						n.a.	n.a.			n.a.	n.a.						n.a.	n.a.
10.2						n.a.	n.a.			n.a.	n.a.						n.a.	n.a.
12.2						n.a.	n.a.			n.a.	n.a.						n.a.	n.a.
13.2						n.a.	n.a.			n.a.	n.a.						n.a.	n.a.
15.2					n.a.	n.a.	n.a.		n.a.	n.a.	n.a.					n.a.	n.a.	n.a.
16.2					n.a.	n.a.	n.a.		n.a.	n.a.	n.a.					n.a.	n.a.	n.a.
14.4					n.a.	n.a.	n.a.		n.a.	n.a.	n.a.				n.a.	n.a.	n.a.	n.a.
16.4					n.a.	n.a.	n.a.		n.a.	n.a.	n.a.				n.a.	n.a.	n.a.	n.a.

VERSIONS THAT ARE NOT POSSIBLE - BETA REV SLN

	CHILLER ONLY											HEAT PUMP						
	Basic	/1P /2P	/1PS /2PS	DS	/DS /1P /DS /2P	/DS /1PS	/DS /2PS	DC	/DC /1P /DC /2P	/DC /1PS	/DC /2PS	HP	HP /1P HP /2P	HP /1PS HP /2PS	HP /DS	HP /DS /1P HP /DS /2P	HP /DS /1PS	HP /DS /2PS
3.2						n.a.	n.a.			n.a.	n.a.							n.a.
4.2						n.a.	n.a.			n.a.	n.a.							n.a.
5.2						n.a.	n.a.			n.a.	n.a.						n.a.	n.a.
6.2						n.a.	n.a.			n.a.	n.a.						n.a.	n.a.
7.2						n.a.	n.a.			n.a.	n.a.						n.a.	n.a.
8.2						n.a.	n.a.			n.a.	n.a.						n.a.	n.a.
9.2						n.a.	n.a.			n.a.	n.a.						n.a.	n.a.
10.2									n.a.	n.a.	n.a.							
12.2									n.a.	n.a.	n.a.							
13.2						n.a.	n.a.			n.a.	n.a.						n.a.	n.a.
15.2						n.a.	n.a.			n.a.	n.a.						n.a.	n.a.
16.2						n.a.	n.a.			n.a.	n.a.						n.a.	n.a.
14.4						n.a.	n.a.			n.a.	n.a.						n.a.	n.a.
16.4						n.a.	n.a.			n.a.	n.a.						n.a.	n.a.

n.a.= Version not possible

Blue Box reserves the right to alter specifications.

VERSIONS THAT ARE NOT POSSIBLE - BETA REV RFE SLN

	CHILLER ONLY											HEAT PUMP						
	Basic	/1P /2P	/1PS /2PS	DS	/DS /1P /DS /2P	/DS /1PS	/DS /2PS	DC	/DC /1P /DC /2P	/DC /1PS	/DC /2PS	HP	HP /1P HP /2P	HP /1PS HP /2PS	HP /DS	HP /DS /1P HP /DS /2P	HP /DS /1PS	HP /DS /2PS
3.2						n.a.	n.a.			n.a.	n.a.							n.a.
4.2						n.a.	n.a.			n.a.	n.a.							n.a.
5.2						n.a.	n.a.			n.a.	n.a.						n.a.	n.a.
6.2						n.a.	n.a.			n.a.	n.a.						n.a.	n.a.
7.2						n.a.	n.a.			n.a.	n.a.						n.a.	n.a.
8.2						n.a.	n.a.			n.a.	n.a.						n.a.	n.a.
9.2						n.a.	n.a.			n.a.	n.a.						n.a.	n.a.
10.2					n.a.				n.a.	n.a.	n.a.					n.a.		
12.2					n.a.				n.a.	n.a.	n.a.					n.a.		
13.2						n.a.	n.a.			n.a.	n.a.						n.a.	n.a.
15.2						n.a.	n.a.			n.a.	n.a.						n.a.	n.a.
16.2						n.a.	n.a.			n.a.	n.a.						n.a.	n.a.
14.4						n.a.	n.a.			n.a.	n.a.						n.a.	n.a.
16.4						n.a.	n.a.			n.a.	n.a.						n.a.	n.a.

VERSIONS THAT ARE NOT POSSIBLE - BETA REV RFA SLN

	CHILLER ONLY											HEAT PUMP						
	Basic	/1P /2P	/1PS /2PS	DS	/DS /1P /DS /2P	/DS /1PS	/DS /2PS	DC	/DC /1P /DC /2P	/DC /1PS	/DC /2PS	HP	HP /1P HP /2P	HP /1PS HP /2PS	HP /DS	HP /DS /1P HP /DS /2P	HP /DS /1PS	HP /DS /2PS
3.2						n.a.	n.a.			n.a.	n.a.							n.a.
4.2						n.a.	n.a.			n.a.	n.a.							n.a.
5.2						n.a.	n.a.			n.a.	n.a.						n.a.	n.a.
6.2						n.a.	n.a.			n.a.	n.a.						n.a.	n.a.
7.2						n.a.	n.a.			n.a.	n.a.						n.a.	n.a.
8.2						n.a.	n.a.			n.a.	n.a.						n.a.	n.a.
9.2						n.a.	n.a.			n.a.	n.a.						n.a.	n.a.
10.2					n.a.				n.a.	n.a.	n.a.					n.a.		
12.2					n.a.				n.a.	n.a.	n.a.					n.a.		

n.a.= Version not possible

Blue Box reserves the right to alter specifications.

NOISE LEVELS - BETA REV

MODEL	Octave bands [dB]																Total [dB(A)]	
	63 Hz		125 Hz		250 Hz		500 Hz		1000 Hz		2000 Hz		4000 Hz		8000 Hz			
	Lw	Lp	Lw	Lp	Lw	Lp	Lw	Lp	Lw	Lp	Lw	Lp	Lw	Lp	Lw	Lp	Lw	Lp
3.2	85	68	87	71	84	67	84	68	85	69	85	69	83	67	79	63	91	75
4.2	85	68	87	71	84	67	84	68	85	69	85	69	83	67	79	63	91	75
5.2	85	68	87	71	84	67	84	68	85	69	85	69	83	67	79	63	91	75
6.2	86	69	83	66	84	67	84	67	84	67	84	67	81	64	77	60	90	73
7.2	87	70	84	67	86	69	85	68	86	69	85	68	82	65	78	61	91	74
8.2	88	70	85	67	87	69	86	68	86	68	86	68	83	65	79	61	92	74
9.2	88	70	85	67	87	69	86	68	86	68	87	69	83	65	79	61	92	74
10.2	88	70	85	67	86	68	86	68	86	68	87	69	83	65	78	60	92	74
12.2	90	72	89	71	88	70	87	69	88	70	88	70	86	68	82	64	94	76
13.2	90	72	89	71	88	70	87	69	88	70	88	70	86	68	82	64	94	76
15.2	85	66	85	66	87	69	88	70	88	69	88	70	85	67	79	60	94	75
16.2	85	67	86	67	88	70	89	71	89	70	89	71	86	67	79	61	95	76
14.4	85	67	85	67	88	69	89	70	88	69	88	70	85	67	79	61	94	75
16.4	86	67	86	67	88	70	90	71	89	70	89	71	86	68	80	61	95	76
18.4	87	68	87	68	89	70	90	71	89	70	90	71	87	68	81	62	95	76
20.4	89	70	88	69	90	71	92	73	91	72	92	73	89	70	83	64	97	78
24.4	90	71	89	70	87	68	93	74	91	72	92	73	90	71	86	67	98	79

NOISE LEVELS - BETA REV LN

MODEL	Octave bands [dB]																Total [dB(A)]	
	63 Hz		125 Hz		250 Hz		500 Hz		1000 Hz		2000 Hz		4000 Hz		8000 Hz			
	Lw	Lp	Lw	Lp	Lw	Lp	Lw	Lp	Lw	Lp	Lw	Lp	Lw	Lp	Lw	Lp	Lw	Lp
3.2	83	66	85	69	82	65	82	66	83	67	83	67	81	65	77	61	89	73
4.2	83	66	85	69	82	65	82	66	83	67	83	67	81	65	77	61	89	73
5.2	83	66	85	69	82	65	82	66	83	67	83	67	81	65	77	61	89	73
6.2	84	67	81	65	82	66	82	65	82	66	82	66	79	63	75	58	88	71
7.2	85	69	83	66	84	67	83	67	84	67	84	67	81	64	76	60	89	72
8.2	86	69	83	67	85	68	84	67	84	68	84	68	81	65	77	60	90	72
9.2	86	69	83	67	85	68	84	67	84	68	85	68	81	65	77	60	90	72
10.2	86	69	83	66	84	68	84	67	84	68	85	68	81	65	76	60	90	72
12.2	88	71	87	71	86	69	85	69	86	69	86	69	84	67	80	63	92	74
13.2	87	71	87	71	86	69	85	69	86	69	86	70	84	67	80	63	92	74
15.2	83	66	83	66	85	69	86	70	86	69	86	70	83	67	77	60	92	73
16.2	84	67	84	67	86	70	87	71	87	70	87	71	84	67	78	61	93	74
14.4	83	67	83	67	86	69	87	70	86	69	86	70	84	67	77	61	92	73
16.4	84	67	84	68	86	70	88	71	87	70	87	71	84	68	78	61	93	74
18.4	85	68	85	68	87	70	88	72	87	71	88	71	85	69	79	63	93	74
20.4	87	70	86	70	88	72	90	73	89	72	90	73	87	70	81	64	95	76
24.4	88	72	88	71	85	69	91	74	89	73	90	74	88	72	84	67	96	77

Air 35°C; Water 12/7 °C
LW: sound power on the basis of measurements made in compliance with ISO 3744 and Eurovent certification program. Such certification refers specifically to the sound Power Level in dB(A). This is therefore the only acoustic data to be considered as binding.
LP: average sound pressure level, at 1m distance, unit in a free field on a reflective surface; non-binding value obtained from the sound power level.

NOISE LEVELS - BETA REV RFE

MODEL	Octave bands [dB]																Total [dB(A)]	
	63 Hz		125 Hz		250 Hz		500 Hz		1000 Hz		2000 Hz		4000 Hz		8000 Hz			
	Lw	Lp	Lw	Lp	Lw	Lp	Lw	Lp	Lw	Lp	Lw	Lp	Lw	Lp	Lw	Lp	Lw	Lp
3.2	77	61	84	68	83	67	84	68	84	67	81	64	78	62	81	65	89	72
4.2	78	61	84	68	83	67	84	68	84	67	81	65	78	62	81	65	89	72
5.2	77	61	84	68	83	67	84	68	84	67	81	64	78	62	81	65	89	72
6.2	78	61	84	67	83	66	84	67	84	67	81	64	78	61	81	64	89	72
7.2	78	61	84	67	83	66	84	67	84	67	81	64	79	62	81	64	89	72
8.2	79	61	86	68	85	67	86	68	86	68	83	65	80	62	83	65	91	73
9.2	80	62	86	68	86	68	86	68	86	68	85	67	80	62	83	65	91	73
10.2	81	63	86	68	85	67	86	68	86	68	85	67	80	62	82	64	91	73
12.2	83	65	87	69	87	69	88	70	88	70	89	71	83	65	74	56	94	76
13.2	83	65	87	69	87	69	88	70	89	71	90	72	83	65	75	57	94	76
15.2	83	65	87	68	87	68	88	70	89	70	90	71	83	65	74	56	94	76
16.2	83	65	87	68	87	68	88	70	89	70	90	71	83	65	74	56	94	76
14.4	83	65	87	68	86	68	88	69	88	69	89	70	82	64	74	55	93	75
16.4	83	64	87	68	86	68	88	69	88	69	89	70	83	64	74	55	93	75
18.4	86	67	89	70	89	70	90	71	90	71	91	72	85	66	75	56	96	77
20.4	87	68	90	71	90	71	91	72	91	72	93	74	86	67	76	57	97	78
24.4	87	68	90	71	91	72	92	73	92	73	94	75	87	68	78	59	98	79

NOISE LEVELS - BETA REV RFE LN

MODEL	Octave bands [dB]																Total [dB(A)]	
	63 Hz		125 Hz		250 Hz		500 Hz		1000 Hz		2000 Hz		4000 Hz		8000 Hz			
	Lw	Lp	Lw	Lp	Lw	Lp	Lw	Lp	Lw	Lp	Lw	Lp	Lw	Lp	Lw	Lp	Lw	Lp
3.2	76	59	82	66	81	65	82	66	82	65	79	62	76	60	79	63	87	70
4.2	76	59	82	66	81	65	82	66	82	65	79	63	76	60	79	63	87	70
5.2	75	59	82	66	81	65	82	66	82	65	79	62	76	60	79	63	87	70
6.2	76	59	82	66	81	65	82	66	82	65	79	63	76	60	79	63	87	70
7.2	76	60	82	66	81	65	82	66	82	66	79	63	77	60	79	63	87	70
8.2	77	61	84	68	83	67	84	67	84	67	81	65	78	62	81	65	89	71
9.2	78	62	84	68	84	67	84	68	84	67	83	66	78	62	81	65	89	71
10.2	79	62	84	67	83	67	84	67	84	67	83	67	78	62	81	64	89	71
12.2	81	65	85	68	85	68	86	69	86	70	87	71	81	64	72	56	92	74
13.2	81	65	85	68	85	68	86	69	87	70	88	71	81	65	73	57	92	74
15.2	81	65	85	68	85	68	86	69	87	70	88	71	81	65	73	56	92	74
16.2	81	65	85	68	85	68	86	70	87	70	87	71	81	65	72	56	92	74
14.4	81	65	85	68	84	68	86	69	86	69	87	70	81	64	72	55	91	73
16.4	81	65	85	68	84	68	86	69	86	69	87	70	81	64	72	56	91	73
18.4	84	67	87	70	87	70	88	72	88	72	89	73	83	66	74	57	94	75
20.4	85	68	88	71	88	72	89	73	89	73	91	74	84	67	74	58	95	76
24.4	85	69	88	72	89	72	90	73	90	74	92	75	85	68	76	59	96	77

Air 35°C; Water 12/7 °C
LW: sound power on the basis of measurements made in compliance with ISO 3744 and Eurovent certification program. Such certification refers specifically to the sound Power Level in dB(A). This is therefore the only acoustic data to be considered as binding.
LP: average sound pressure level, at 1m distance, unit in a free field on a reflective surface; non-binding value obtained from the sound power level.

NOISE LEVELS - BETA REV RFA

MODEL	Octave bands [dB]																Total [dB(A)]	
	63 Hz		125 Hz		250 Hz		500 Hz		1000 Hz		2000 Hz		4000 Hz		8000 Hz			
	Lw	Lp	Lw	Lp	Lw	Lp	Lw	Lp	Lw	Lp	Lw	Lp	Lw	Lp	Lw	Lp	Lw	Lp
3.2	78	62	83	66	84	68	85	69	85	68	82	65	76	60	85	68	90	73
4.2	78	62	83	66	84	68	85	69	85	68	82	65	77	60	85	68	90	74
5.2	78	62	83	66	84	68	85	69	85	68	82	65	76	60	85	68	90	74
6.2	78	61	83	66	84	67	85	68	85	68	82	65	77	60	85	68	90	73
7.2	78	61	83	66	84	67	85	68	85	68	82	65	77	60	85	68	90	73
8.2	80	62	85	67	86	68	87	69	87	69	84	66	78	60	86	68	92	74
9.2	81	63	85	67	86	68	87	69	87	69	85	67	79	61	86	68	92	74
10.2	81	63	85	67	87	69	87	69	87	69	86	68	79	61	86	68	92	74
12.2	82	64	86	68	88	70	89	71	88	70	87	69	81	63	88	70	94	76
13.2	81	63	86	68	88	70	89	71	89	71	87	69	81	63	88	70	94	76
15.2	81	63	86	67	88	69	89	70	89	70	87	69	81	63	88	69	94	76
16.2	81	63	86	67	88	69	89	70	89	71	87	68	81	63	88	69	94	76
14.4	81	63	86	67	87	69	88	70	88	69	85	67	80	61	88	69	93	75
16.4	81	63	86	67	87	69	88	70	88	70	85	67	80	62	88	69	93	75

NOISE LEVELS - BETA REV RFA LN

MODEL	Octave bands [dB]																Total [dB(A)]	
	63 Hz		125 Hz		250 Hz		500 Hz		1000 Hz		2000 Hz		4000 Hz		8000 Hz			
	Lw	Lp	Lw	Lp	Lw	Lp	Lw	Lp	Lw	Lp	Lw	Lp	Lw	Lp	Lw	Lp	Lw	Lp
3.2	76	60	81	64	82	66	83	67	83	66	80	63	75	58	83	66	88	71
4.2	76	60	81	64	82	66	83	67	83	66	80	63	75	58	83	66	88	72
5.2	76	60	81	64	82	66	83	67	83	66	80	63	75	58	83	66	88	72
6.2	76	60	81	64	82	66	83	67	83	66	80	64	75	58	83	66	88	71
7.2	77	60	81	64	82	66	83	67	83	66	80	64	75	59	83	66	88	71
8.2	78	62	83	66	84	68	85	69	85	68	82	65	77	60	84	68	90	72
9.2	79	62	83	66	84	68	85	69	85	68	83	66	77	60	84	68	90	72
10.2	79	63	83	66	85	68	85	69	85	68	84	67	77	61	84	68	90	72
12.2	80	63	84	67	86	69	87	70	86	70	85	68	79	62	86	69	92	74
13.2	80	63	84	68	86	69	87	70	87	70	85	69	79	63	86	69	92	74
15.2	80	63	84	68	86	69	87	70	87	70	85	69	79	63	86	69	92	74
16.2	80	63	84	68	86	69	87	70	87	71	85	69	79	63	86	69	92	74
14.4	80	63	84	67	85	69	86	70	86	69	83	67	78	62	86	69	91	73
16.4	79	63	84	67	85	69	86	70	86	70	83	67	78	62	86	69	91	73

Air 35°C; Water 12/7 °C
LW: sound power on the basis of measurements made in compliance with ISO 3744 and Eurovent certification program. Such certification refers specifically to the sound Power Level in dB(A). This is therefore the only acoustic data to be considered as binding.
LP: average sound pressure level, at 1m distance, unit in a free field on a reflective surface; non-binding value obtained from the sound power level.

NOISE LEVELS - BETA REV SLN

MODEL	Octave bands [dB]																Total [dB(A)]	
	63 Hz		125 Hz		250 Hz		500 Hz		1000 Hz		2000 Hz		4000 Hz		8000 Hz			
	Lw	Lp	Lw	Lp	Lw	Lp	Lw	Lp	Lw	Lp	Lw	Lp	Lw	Lp	Lw	Lp	Lw	Lp
3.2	82	65	84	67	82	65	81	64	81	64	81	64	79	62	74	57	87	70
4.2	82	65	83	66	82	65	81	64	81	64	81	64	79	62	74	57	87	70
5.2	82	65	83	66	82	65	81	64	81	64	81	64	79	62	74	57	87	70
6.2	80	62	82	64	80	62	80	62	80	62	80	62	77	59	73	55	86	68
7.2	82	64	83	65	82	64	81	63	81	63	81	63	79	61	74	56	87	69
8.2	82	64	84	66	82	64	82	64	82	64	82	64	80	62	75	57	88	70
9.2	82	64	84	66	82	64	82	64	82	64	83	65	79	61	74	56	88	70
10.2	80	61	79	60	80	62	82	63	82	63	83	64	80	61	75	56	88	70
12.2	81	62	80	62	82	63	83	65	83	65	85	66	81	63	76	58	90	71
13.2	81	62	80	61	82	63	83	64	84	65	85	66	82	63	77	58	90	71
15.2	81	62	80	61	82	63	83	64	84	65	84	65	82	63	77	58	90	71
16.2	81	62	81	62	82	63	84	65	85	66	85	66	82	63	77	58	91	72
14.4	82	63	81	62	82	63	84	65	84	65	84	65	82	63	77	58	90	71
16.4	82	63	82	63	83	64	85	66	84	65	85	66	83	64	78	59	91	72

NOISE LEVELS - BETA REV RFE SLN

MODEL	Octave bands [dB]																Total [dB(A)]	
	63 Hz		125 Hz		250 Hz		500 Hz		1000 Hz		2000 Hz		4000 Hz		8000 Hz			
	Lw	Lp	Lw	Lp	Lw	Lp	Lw	Lp	Lw	Lp	Lw	Lp	Lw	Lp	Lw	Lp	Lw	Lp
3.2	73	56	78	61	78	61	81	64	80	63	77	60	75	58	74	57	85	68
4.2	72	55	77	60	77	60	81	64	79	62	78	61	75	58	74	57	85	68
5.2	71	54	77	60	77	60	81	64	80	63	78	61	74	57	74	57	85	68
6.2	72	54	78	60	78	60	80	62	80	62	78	60	75	57	75	57	85	67
7.2	74	56	78	60	77	59	81	63	80	62	79	61	75	57	74	56	85	67
8.2	76	58	79	61	79	61	81	63	81	63	82	64	76	58	69	51	87	69
9.2	77	59	78	60	80	62	81	63	81	63	83	65	76	58	68	50	87	69
10.2	78	59	78	59	80	61	81	62	81	62	83	65	76	57	66	48	87	69
12.2	78	60	79	60	81	63	83	64	84	65	86	67	79	60	71	53	90	71
13.2	78	59	80	61	82	63	83	64	85	66	86	67	79	60	72	53	90	71
15.2	78	59	80	61	82	63	83	64	85	66	86	67	79	60	72	53	90	71
16.2	78	59	80	61	81	62	83	64	85	66	85	66	79	60	71	52	90	71
14.4	79	60	81	62	82	63	84	65	84	65	85	66	79	60	72	53	89	70
16.4	79	60	81	62	81	62	83	64	84	65	85	66	79	60	72	53	89	70

NOISE LEVELS - BETA REV RFA SLN

MODEL	Octave bands [dB]																Total [dB(A)]	
	63 Hz		125 Hz		250 Hz		500 Hz		1000 Hz		2000 Hz		4000 Hz		8000 Hz			
	Lw	Lp	Lw	Lp	Lw	Lp	Lw	Lp	Lw	Lp	Lw	Lp	Lw	Lp	Lw	Lp	Lw	Lp
3.2	74	57	78	61	80	63	82	65	81	64	78	61	73	56	80	63	86	69
4.2	74	57	78	61	80	63	82	65	81	64	78	61	74	57	80	63	86	69
5.2	74	57	78	61	80	63	82	65	81	64	78	61	73	56	80	63	86	69
6.2	74	56	78	60	80	62	81	63	81	63	78	60	73	55	80	62	86	68
7.2	75	57	78	60	80	62	82	64	81	63	79	61	74	56	80	62	86	68
8.2	76	58	80	62	82	64	83	65	83	65	80	62	75	57	82	64	88	70
9.2	77	59	80	62	82	64	83	65	83	65	82	64	75	57	81	63	88	70
10.2	78	59	79	61	82	64	83	65	83	64	83	64	76	57	81	62	88	70
12.2	78	59	80	61	83	64	84	65	84	66	84	66	78	59	82	63	90	71

Air 35°C; Water 12/7 °C
LW: sound power on the basis of measurements made in compliance with ISO 3744 and Eurovent certification program. Such certification refers specifically to the sound Power Level in dB(A). This is therefore the only acoustic data to be considered as binding.
LP: average sound pressure level, at 1m distance, unit in a free field on a reflective surface; non-binding value obtained from the sound power level.

DIMENSIONAL DIAGRAMS
BETA REV 3.2-4.2-5.2

A4G063-A

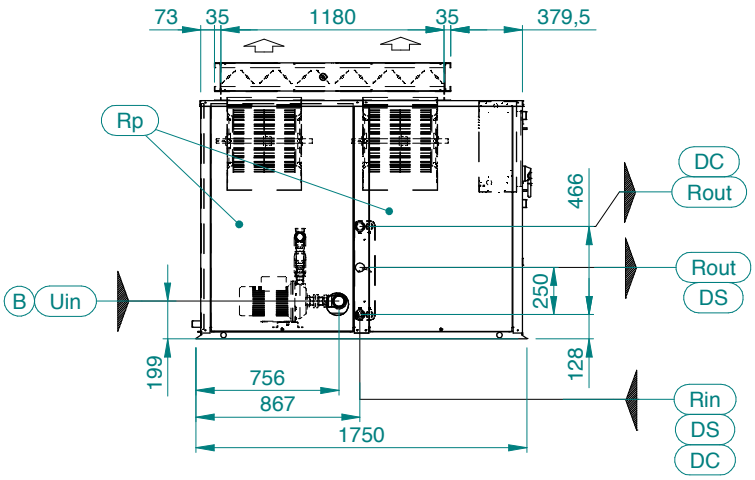

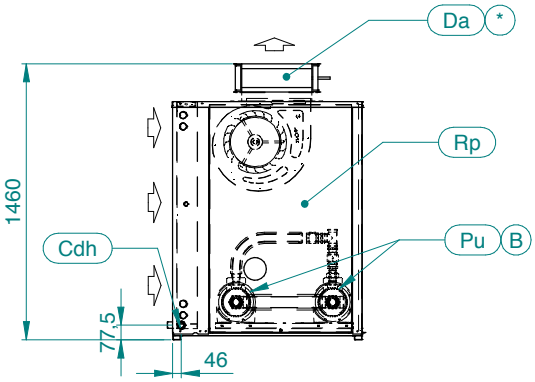

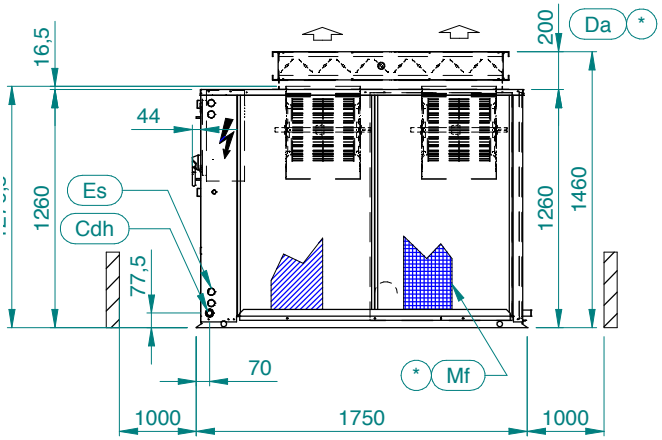

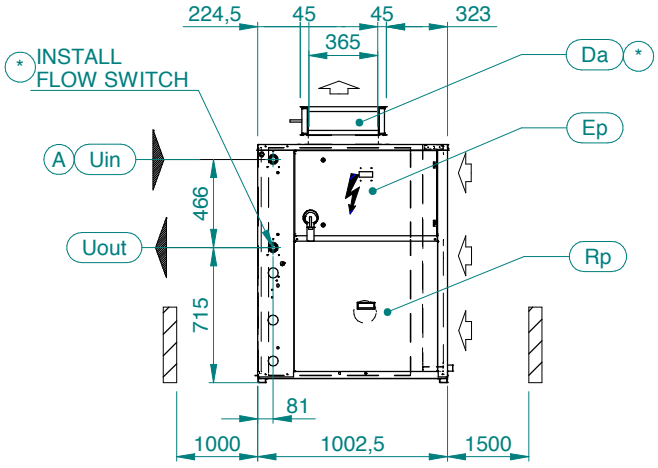

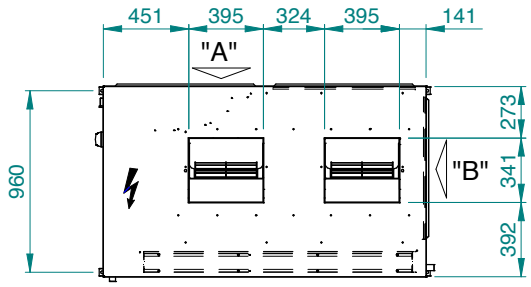

HYDRAULIC CONNECTIONS

(A) WITHOUT HYDRAULIC MODULE

(B) HYDRAULIC MODULE ST1P-2P

Uin		Uout
(A)	(B)	
G 1 1/4" M	G 2" M	G 1 1/4" M

	DC	DS
Rin	G 1 1/4" M	G 1"F
Rout	G 1 1/4" M	G 1"F

*	OPTIONAL

DIMENSIONAL DIAGRAMS
BETA REV 3.2-4.2-5.2

A4G063-A

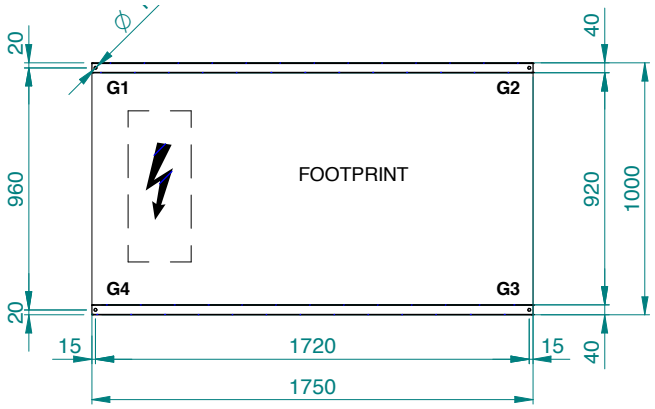

SCALE
1:30

MODEL	WEIGHT(kg)	OPERATING WEIGHT (kg)	G1 (kg)	G2 (kg)	G3 (kg)	G4 (kg)
BETA REV 3.2	471	474	157	87	82	148
BETA REV 4.2	484	487	163	88	83	153
BETA REV 5.2	485	488	165	88	82	153
BETA REV 3.2 ST 1P-2P	518	520	164	105	98	153
BETA REV 4.2 ST 1P-2P	529	532	170	106	98	158
BETA REV 5.2 ST 1P-2P	531	534	172	106	98	158
BETA REV 3.2 DC-DS	500	505	172	97	85	151
BETA REV 4.2 DC-DS	513	519	179	99	86	155
BETA REV 5.2 DC-DS	519	526	183	101	86	156
BETA REV 3.2 ST 1P-2P-DC-DS	545	550	179	115	100	156
BETA REV 4.2 ST 1P-2P-DC-DS	559	565	187	117	101	160
BETA REV 5.2 ST 1P-2P-DC-DS	565	572	191	119	101	161
BETA REV 3.2 HP	511	513	168	93	90	162
BETA REV 4.2 HP	522	525	174	94	90	167
BETA REV 5.2 HP	534	537	175	95	94	173
BETA REV 3.2 HP-ST 1P-2P	555	557	175	110	105	167
BETA REV 4.2 HP-ST 1P-2P	569	572	182	112	106	172
BETA REV 5.2 HP-ST 1P-2P	581	584	183	113	110	178
BETA REV 3.2 HP-DS	547	552	187	104	93	168
BETA REV 4.2 HP-DS	562	568	195	106	94	173
BETA REV 5.2 HP-DS	580	587	199	109	99	180
BETA REV 3.2 HP-ST 1P-2P-DS	595	600	195	122	109	174
BETA REV 4.2 HP-ST 1P-2P-DS	608	614	203	124	109	178
BETA REV 5.2 HP-ST 1P-2P-DS	626	633	207	127	114	185

Blue Box reserves the right to alter specifications.

DIMENSIONAL DIAGRAMS
BETA REV LE 6.2-7.2

A4G099-A

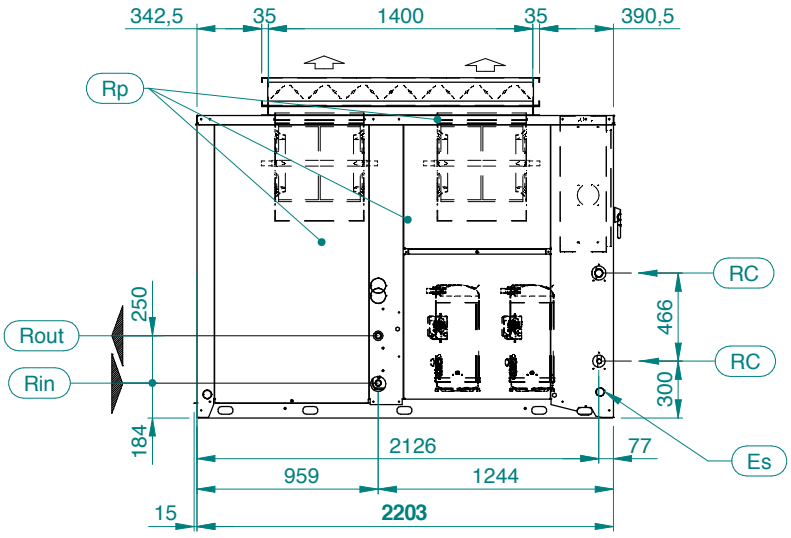

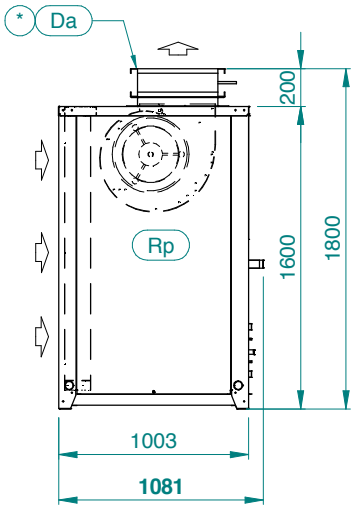

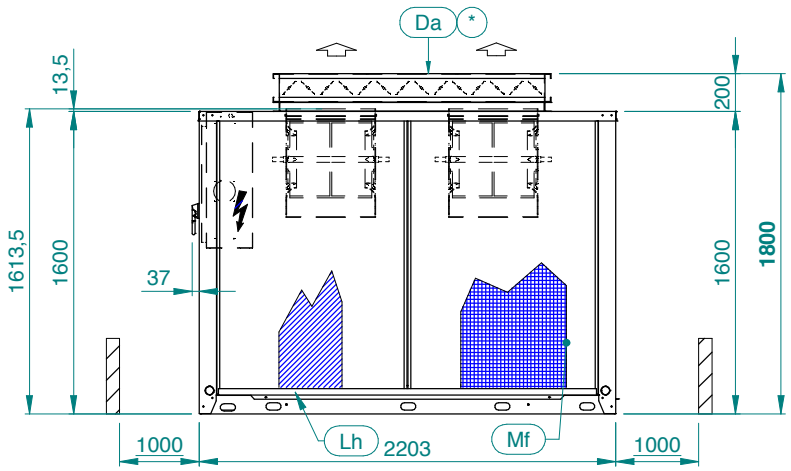

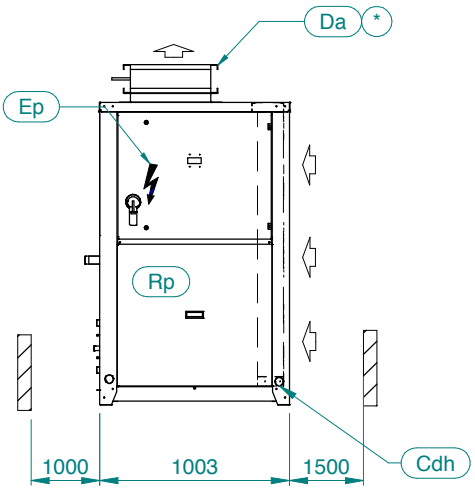

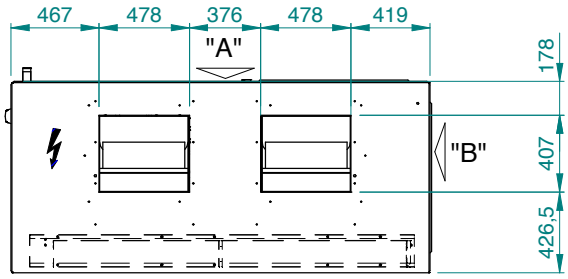

*	OPTIONAL

	ø Rin	ø Rout
DS	G1"M	G1"M

Blue Box reserves the right to alter specifications.

DIMENSIONAL DIAGRAMS
BETA REV LE 6.2-7.2

A4G099-A

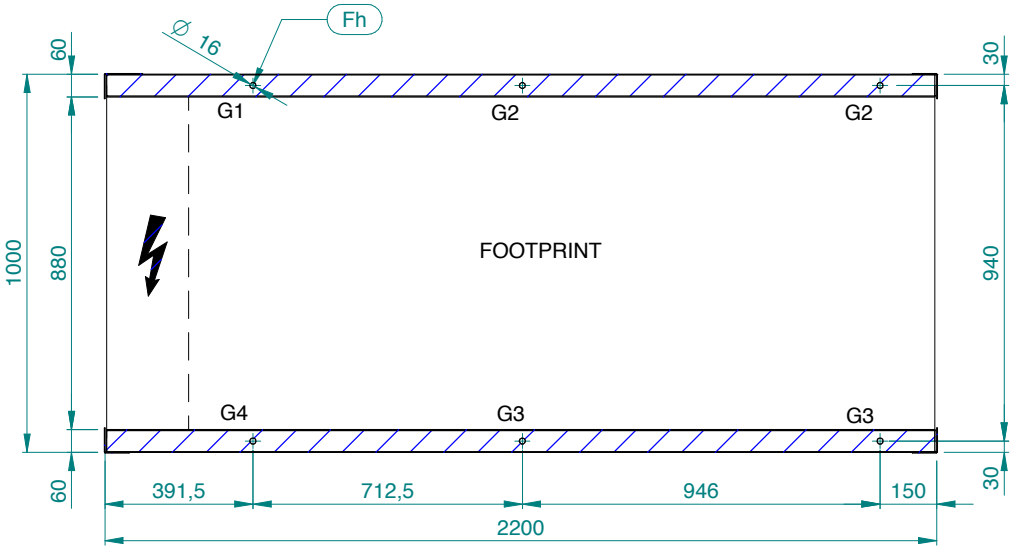

SCALA
1:20

MODEL	WEIGHT(kg)	OPERATING WEIGHT (kg)	G1 (kg)	G2 (kg)	G3 (kg)	G4 (kg)
BETA REV 6.2 LE	611	611	201	65	55	170
BETA REV 6.2 LE-DS	620	621	199	67	58	172
BETA REV 6.2 LE/HP	714	714	212	70	72	218
BETA REV 6.2 LE/HP-DS	723	724	212	71	74	222
BETA REV 7.2 LE	625	625	209	66	55	174
BETA REV 7.2 LE-DS	634	635	207	68	58	176
BETA REV 7.2 LE/HP	727	727	219	71	72	222
BETA REV 7.2 LE/HP-DS	737	738	220	72	74	226

Blue Box reserves the right to alter specifications.

DIMENSIONAL DIAGRAMS
BETA REV 8.2-13.2

A4G181-A

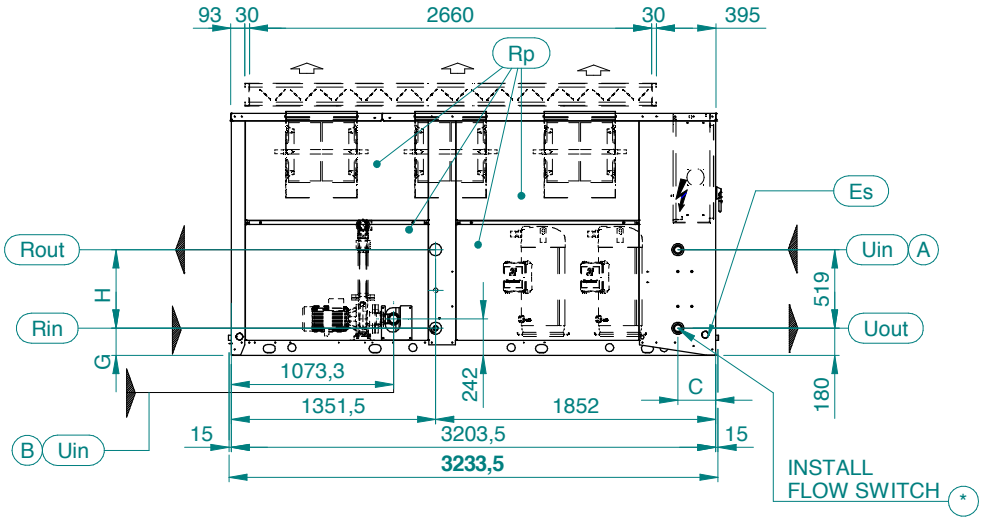

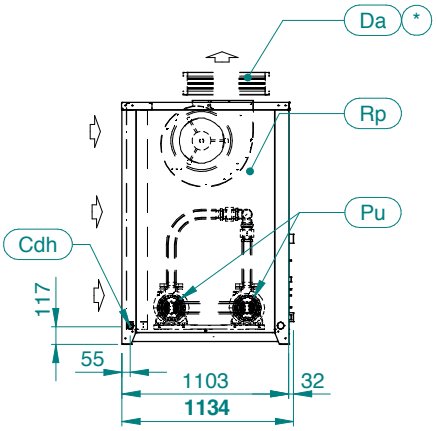

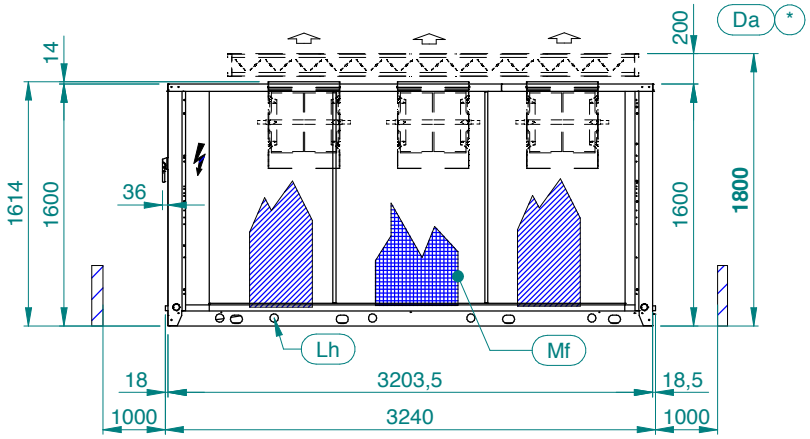

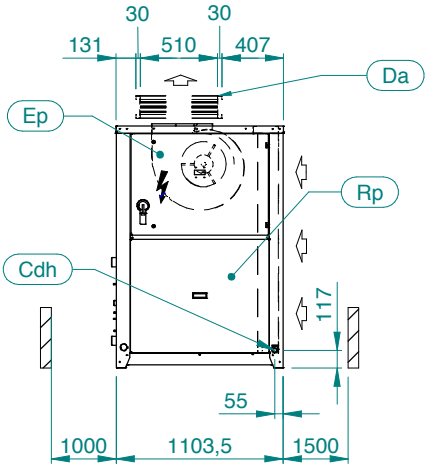

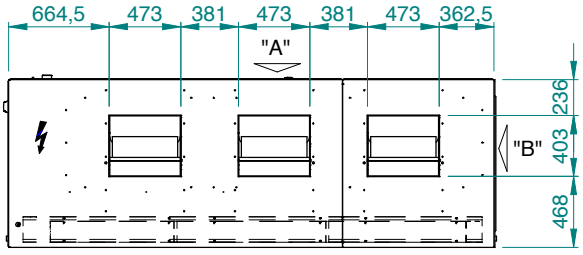

HYDRAULIC CONNECTIONS

(A) WITHOUT HYDRAULIC MODULE

(B) HYDRAULIC MODULE ST1P-2P

		ø Rin	ø Rout	G	H
8.2-13.2	DC	G2"M	G2"M	180	519
	DS	G1"M	G1"M	180	250

*	OPTIONAL

Blue Box reserves the right to alter specifications.

DIMENSIONAL DIAGRAMS
BETA REV 8.2-13.2

A4G181-A

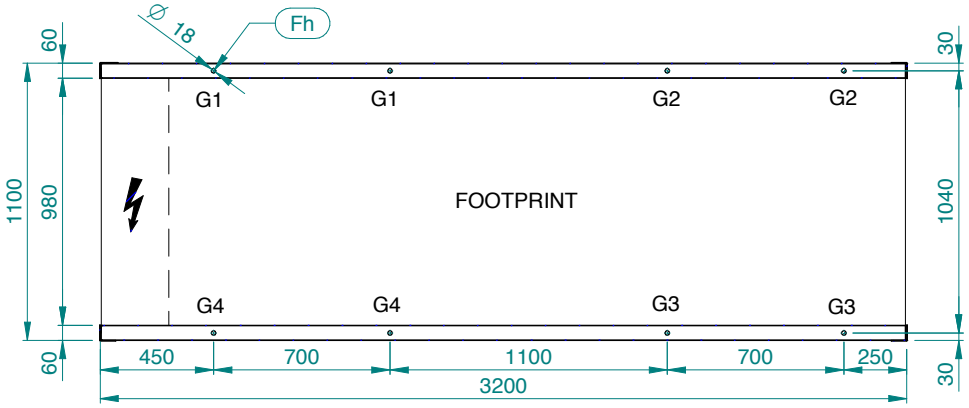

SCALE
1:30

MODEL	WEIGHT(kg)	OPERATING WEIGHT (kg)	G1 (kg)	G2 (kg)	G3 (kg)	G4 (kg)
BETA REV 8.2	912,3	918	198	71	50	140
BETA REV 9.2	921,7	928	201	71	50	142
BETA REV 10.2	932,5	940	206	71	50	143
BETA REV 12.2	972	980	220	72	49	149
BETA REV 13.2	1015	1024	233	75	50	154
BETA REV 8.2 ST 1P-2P	968,3	974	201	85	60	141
BETA REV 9.2 ST 1P-2P	973,7	980	204	85	59	142
BETA REV 10.2 ST 1P-2P	986,5	994	209	85	59	144
BETA REV 12.2 ST 1P-2P	1026	1034	223	86	58	150
BETA REV 13.2 ST 1P-2P	1067	1076	236	89	58	155
BETA REV 8.2 DC-DS	1006,8	1020	220	81	56	153
BETA REV 9.2 DC-DS	1019,7	1034	225	82	56	154
BETA REV 10.2 DC-DS	1041,5	1058	232	83	57	157
BETA REV 12.2 DC-DS	1080	1098	246	85	56	162
BETA REV 13.2 DC-DS	1127	1148	261	90	57	166
BETA REV 8.2 ST 1P-2P-DC-DS	1062,8	1076	223	95	66	154
BETA REV 9.2 ST 1P-2P-DC-DS	1073,7	1088	228	96	65	155
BETA REV 10.2 ST 1P-2P-DC-DS	1089,5	1106	234	97	65	157
BETA REV 12.2 ST 1P-2P-DC-DS	1134	1152	249	99	65	163
BETA REV 13.2 ST 1P-2P-DC-DS	1179	1200	263	104	66	167
BETA REV 8.2 HP	1068,3	1074	206	78	69	184
BETA REV 9.2 HP	1079,7	1086	210	78	69	186
BETA REV 10.2 HP	1088,5	1096	215	78	68	187
BETA REV 12.2 HP	1160	1168	228	81	72	203
BETA REV 13.2 HP	1199	1208	240	84	73	207
BETA REV 8.2 HP-ST 1P-2P	1122,3	1128	210	91	79	184
BETA REV 9.2 HP-ST 1P-2P	1133,7	1140	214	91	79	186
BETA REV 10.2 HP-ST 1P-2P	1142,5	1150	219	91	78	187
BETA REV 12.2 HP-ST 1P-2P	1214	1222	232	94	82	203
BETA REV 13.2 HP-ST 1P-2P	1253	1262	244	97	83	207
BETA REV 8.2 HP-DS	1077,1	1084	209	80	70	183
BETA REV 9.2 HP-DS	1088,2	1096	213	80	70	185
BETA REV 10.2 HP-DS	1100,8	1110	218	81	69	187
BETA REV 12.2 HP-DS	1170	1180	231	84	73	202
BETA REV 13.2 HP-DS	1212,7	1224	244	87	74	207
BETA REV 8.2 HP-ST 1P-2P-DS	1131,1	1138	212	93	80	184
BETA REV 9.2 HP-ST 1P-2P-DS	1140,2	1148	216	93	80	185
BETA REV 10.2 HP-ST 1P-2P-DS	1156,8	1166	227	95	77	184
BETA REV 12.2 HP-ST 1P-2P-DS	1224	1234	235	97	83	202
BETA REV 13.2 HP-ST 1P-2P-DS	1266,7	1278	248	100	84	207

Blue Box reserves the right to alter specifications.

DIMENSIONAL DIAGRAMS
BETA REV 14.4-16.4

A4G183-A

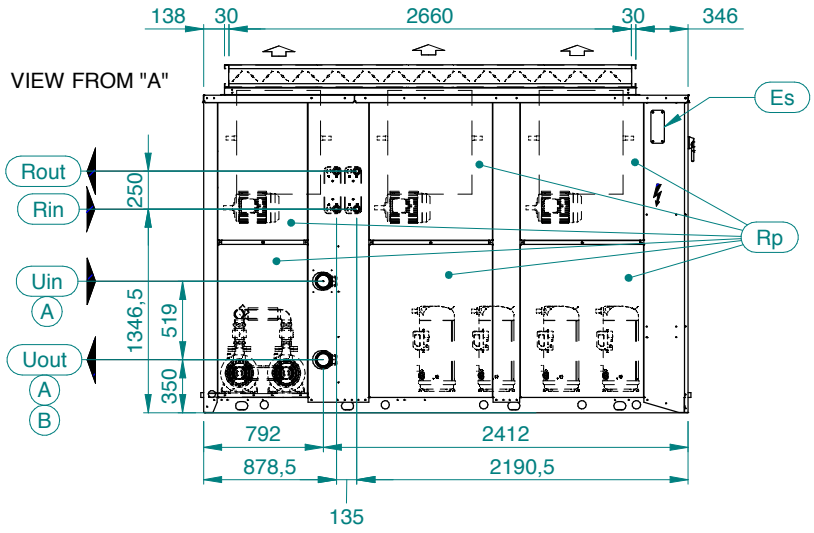

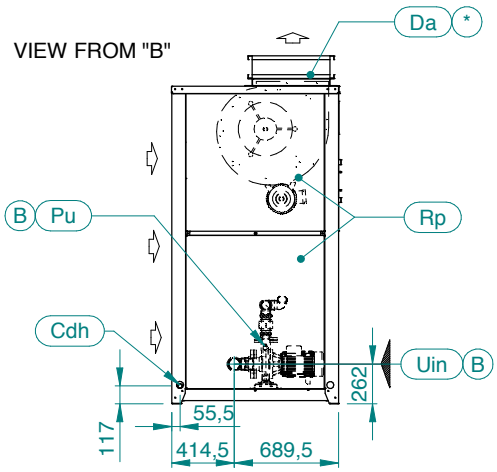

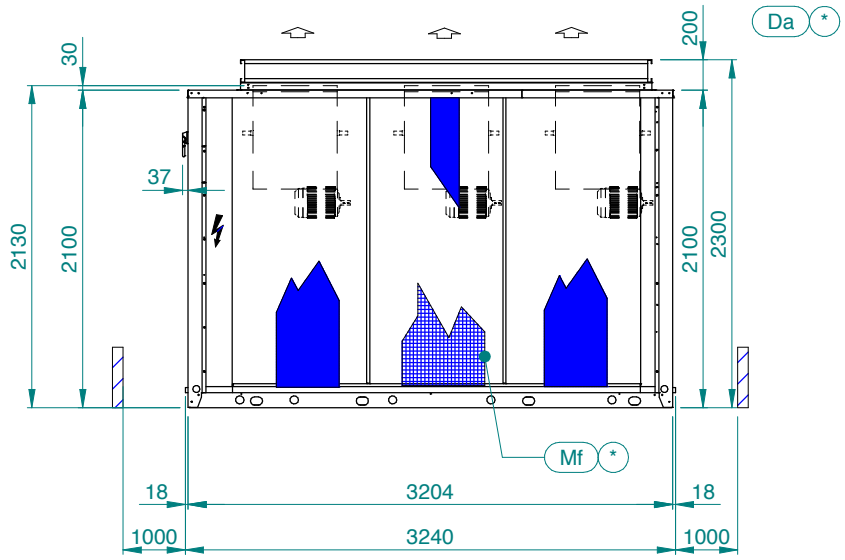

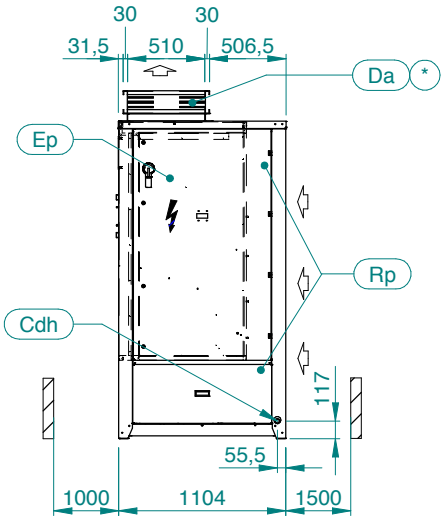

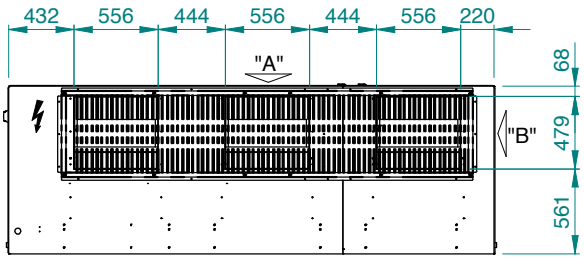

Uin		Uout	Rin	Rout
(A)	(B)			
G 3" F	G 2 1/2" F	G 3" F	G 1" M	G 1" M

*	OPTIONAL

HYDRAULIC CONNECTIONS

(A) WITHOUT HYDRAULIC MODULE

(B) HYDRAULIC MODULE ST1P-2P

DIMENSIONAL DIAGRAMS
BETA REV 14.4-16.4

A4G183-A

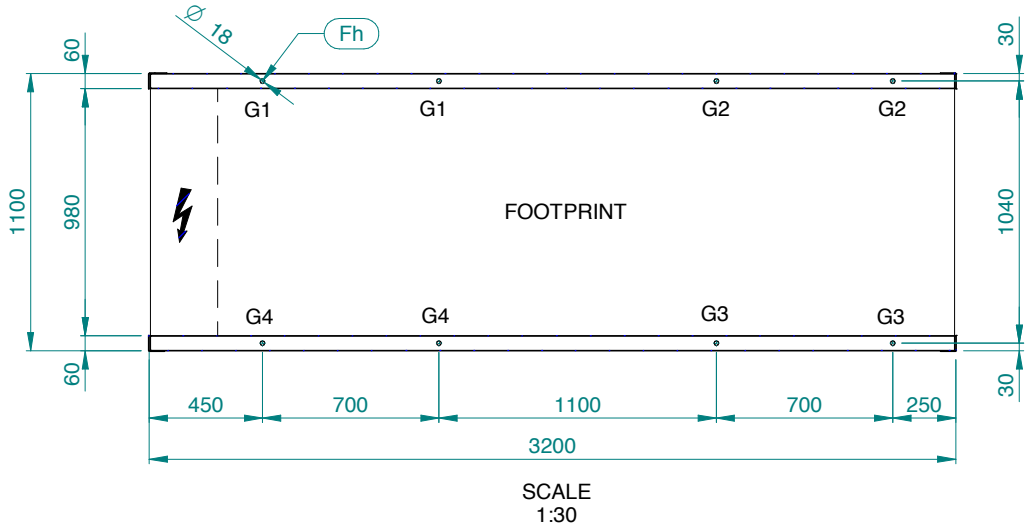

SCALE
1:30

MODEL	WEIGHT(kg)	OPERATING WEIGHT (kg)	G1 (kg)	G2 (kg)	G3 (kg)	G4 (kg)
BETA REV 16.4	1422,6	1434	292	143	93	189
BETA REV 16.4 ST 1P-2P	1552,6	1574	289	184	122	192
BETA REV 16.4 DS	1520	1534	303	156	105	203
BETA REV 16.4 ST 1P-2P-DS	1632	1656	297	196	133	202
BETA REV 14.4	1274,6	1286	247	133	92	171
BETA REV 14.4 ST 1P-2P	1404,6	1426	245	173	122	173
BETA REV 14.4 DS	1374	1388	259	146	104	185
BETA REV 14.4 ST 1P-2P-DS	1482	1506	253	185	133	182

Blue Box reserves the right to alter specifications.

DIMENSIONAL DIAGRAMS
BETA REV HP 14.4-16.4

A4G187-A

VIEW FROM "A"

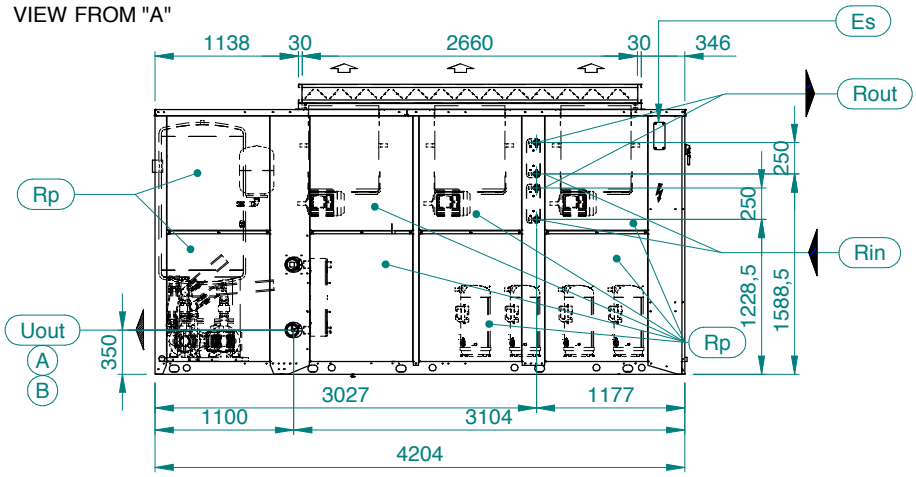

VIEW FROM "B"

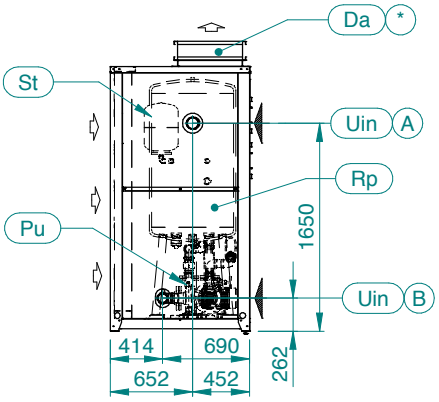

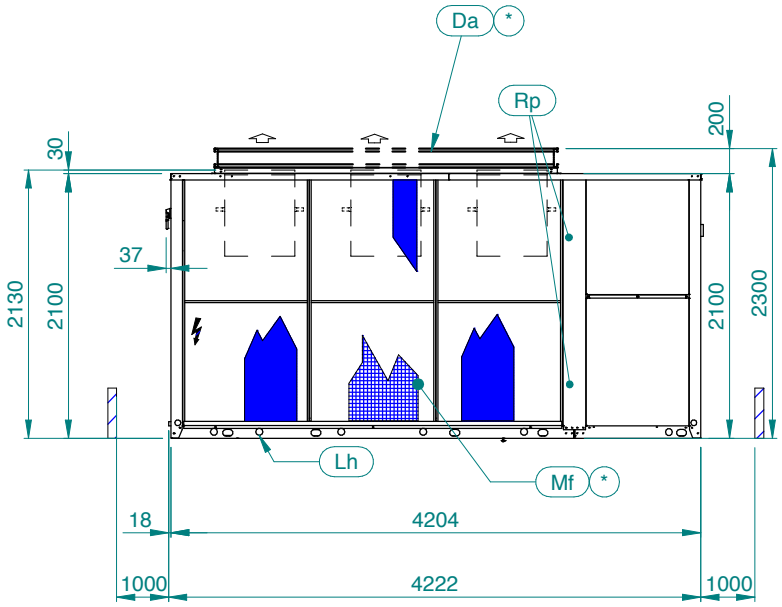

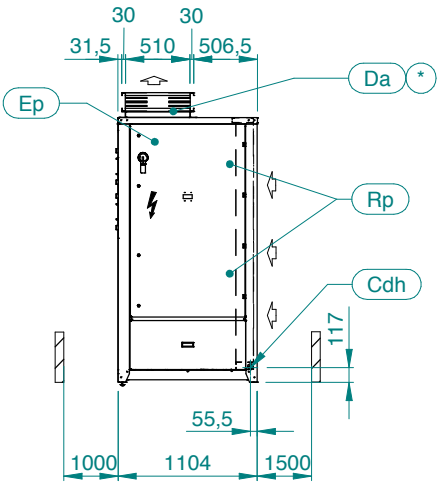

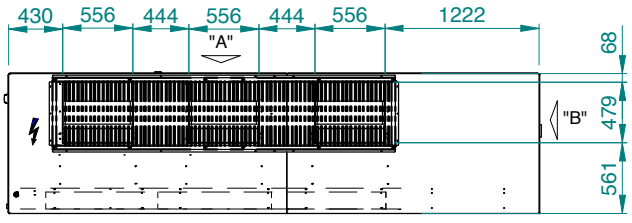

*	OPTIONAL

HYDRAULIC CONNECTIONS

(A) HYDRAULIC MODULE ST1PS-2PS

(B) HYDRAULIC MODULE ST1P-2P

Uin		Uout	Rin	Rout
(A)	(B)			
G 3" F	G 2 1/2" F	G 3" F	G 1" M	G 1" M

Blue Box reserves the right to alter specifications.

DIMENSIONAL DIAGRAMS
BETA REV HP14.4-16.4

A4G187-A

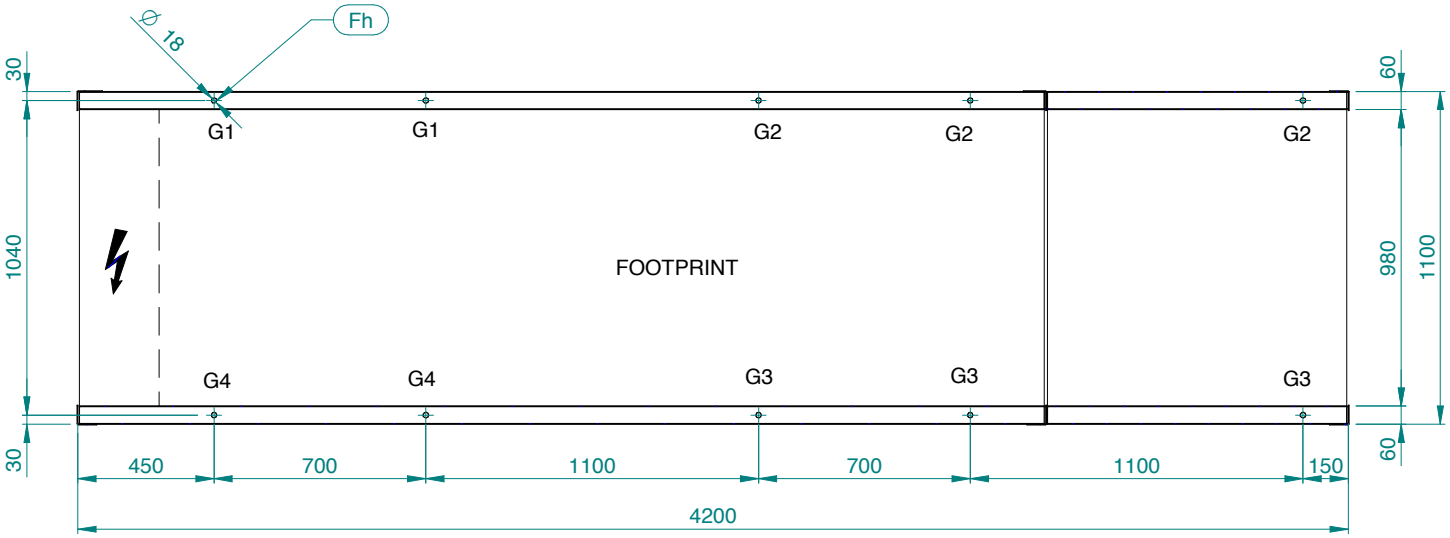

SCALE

1:25

MODEL	WEIGHT(kg)	OPERATING WEIGHT (kg)	G1 (kg)	G2 (kg)	G3 (kg)	G4 (kg)
BETA REV 16.4 HP-ST 1P-2P	1769	1792	352	155	119	270
BETA REV 16.4 HP-ST 1P-2P-DS	1826	1852	367	160	121	278
BETA REV 16.4 HP-ST 1PS-2PS-S	1919	2642	356	400	299	266
BETA REV 16.4 HP-ST 1PS-2PS-S-DS	1978	2704	371	405	301	275
BETA REV 14.4 HP-ST 1P-2P	1619	1642	305	147	120	249
BETA REV 14.4 HP-ST 1P-2P-DS	1678	1704	320	152	122	258
BETA REV 14.4 HP-ST 1PS-2PS-S	1875	2598	345	398	298	258
BETA REV 14.4 HP-ST 1PS-2PS-S-DS	1924	2650	357	403	299	266

Blue Box reserves the right to alter specifications.

DIMENSIONAL DIAGRAMS
BETA REV CH-HP 15.2-16.2

A4G200-A

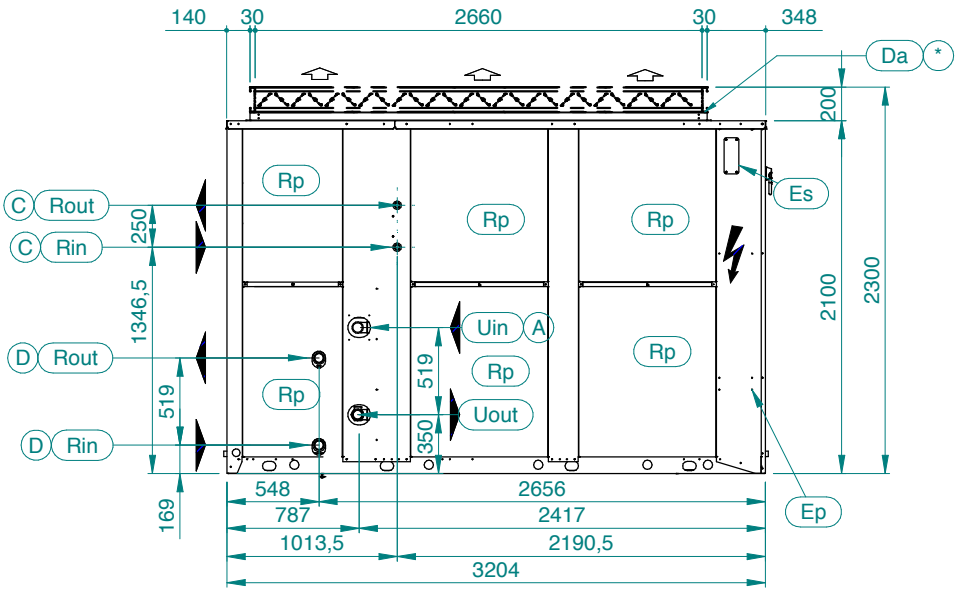

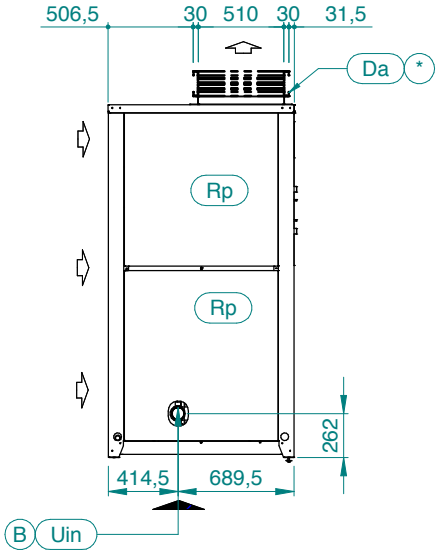

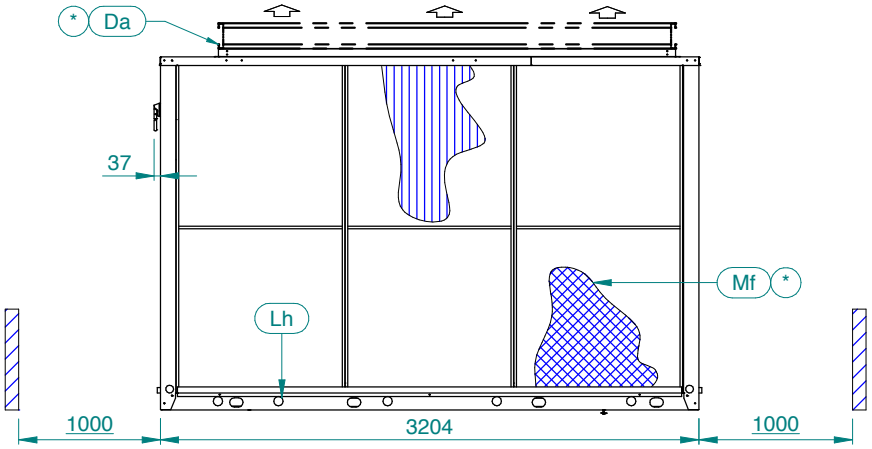

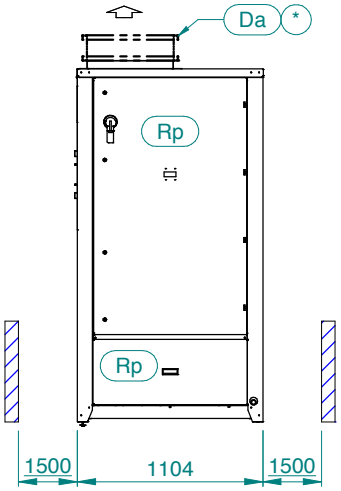

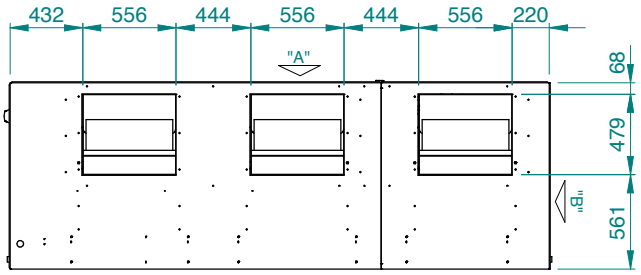

A WITHOUT HYDRAULIC MODULE

B HYDRAULIC MODULE ST 1P-2P

C DS VERSION

D DC VERSION

*	OPTIONAL

	DC	DS
Rin	G 2" F	G 1" M
Rout	G 2" F	G 1" M

	Uin	Uout
A	G 2"F	G 2"F
B	2"1/2F	

Blue Box reserves the right to alter specifications.

DIMENSIONAL DIAGRAMS
BETA REV CH-HP 15.2-16.2

A4G200-A

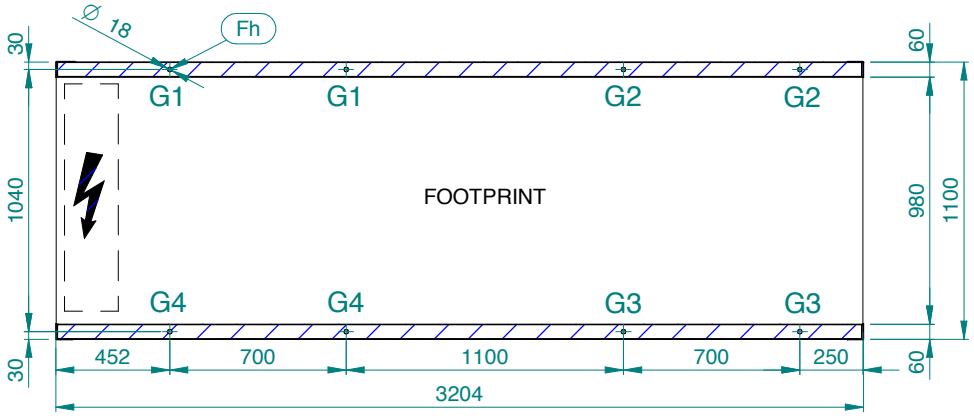

SCALA
1:30

MODEL	WEIGHT(kg)	OPERATING WEIGHT (kg)	G1 (kg)	G2 (kg)	G3 (kg)	G4 (kg)
BETA REV 15.2	1286	1298	281	108	72	188
BETA REV 16.2	1313	1324	288	111	73	190
BETA REV 15.2 ST 1P-2P	1380	1402	275	143	97	186
BETA REV 16.2 ST 1P-2P	1409	1430	282	146	98	189
BETA REV 15.2 DS	1308,3	1324	286	115	75	186
BETA REV 16.2 DS	1338,8	1354	294	119	76	188
BETA REV 15.2 ST 1P-2P-DS	1404,3	1430	280	151	99	185
BETA REV 16.2 ST 1P-2P-DS	1432,8	1458	288	154	100	187
BETA REV 15.2 HP	1446	1458	288	118	94	229
BETA REV 16.2 HP	1505	1516	293	123	101	241
BETA REV 15.2 HP-ST 1P-2P	1534	1556	283	151	120	224
BETA REV 16.2 HP-ST 1P-2P	1601	1622	290	155	128	238
BETA REV 15.2 HP-DS	1460,3	1476	292	125	96	225
BETA REV 16.2 HP-DS	1540,8	1556	301	131	105	241
BETA REV 15.2 HP-ST 1P-2P-DS	1556,3	1582	288	158	122	223
BETA REV 16.2 HP-ST 1P-2P-DS	1628,8	1654	296	164	131	236
BETA REV 15.2 DC	1360,3	1388	290	142	86	176
BETA REV 16.2 DC	1395,2	1424	298	149	88	177

Blue Box reserves the right to alter specifications.

DIMENSIONAL DIAGRAMS
BETA REV 18.4-24.4

A4G202-A

VIEW FROM "A"

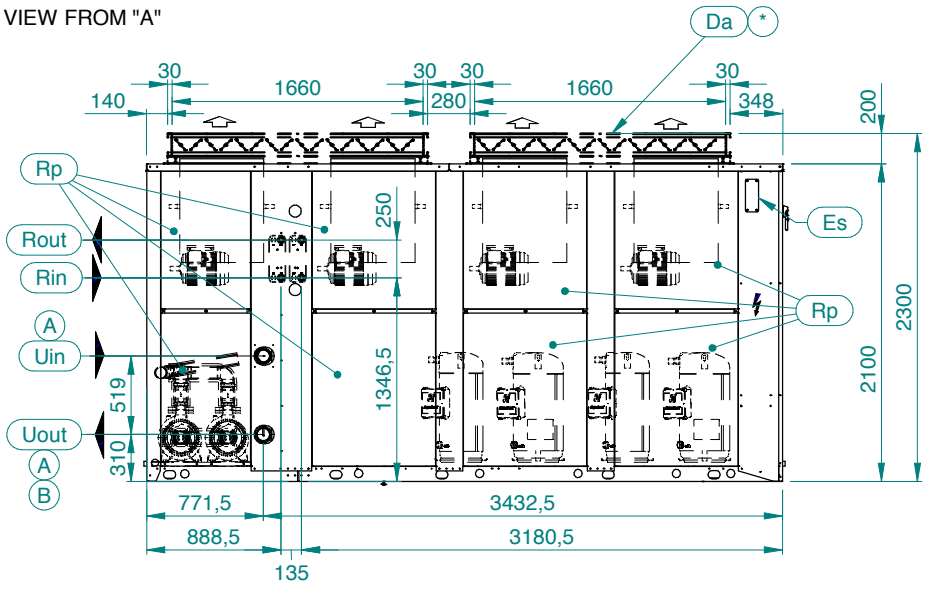

VIEW FROM "B"

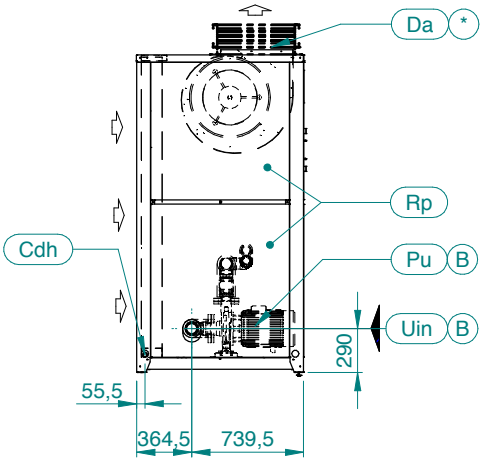

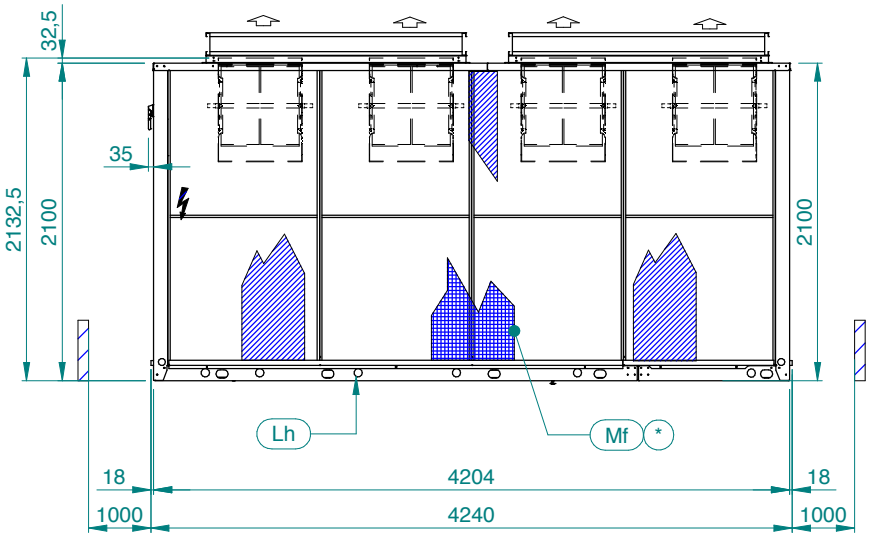

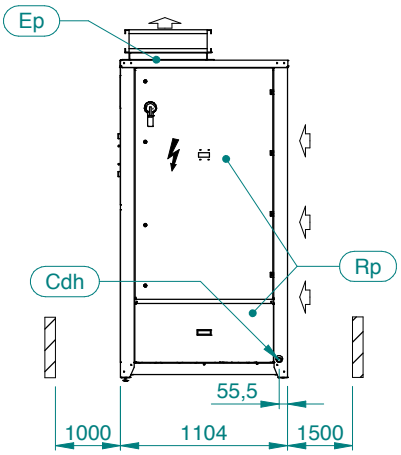

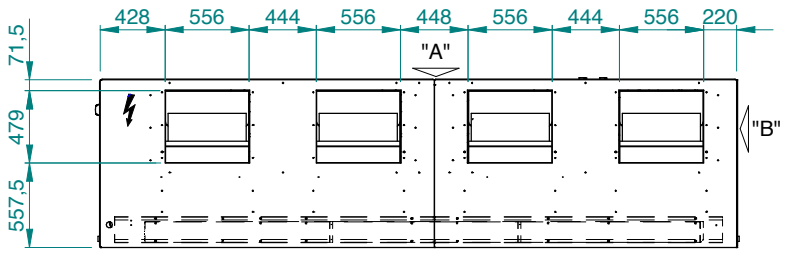

*	OPTIONAL

HYDRAULIC CONNECTIONS

(A) WITHOUT HYDRAULIC MODULE

(B) HYDRAULIC MODULE ST1P-2P

STD UNIT	D	Uin		Uout	Rin	Rout
		(A)	(B)			
18.4-24.4	262	G 3" F	G 2 1/2" F	G 3" F	G 1" F	G 1" F
26.4	290	G 3" F	G 2 1/2" F	G 3" F	G 1" F	G 1" F

SLN UNIT	D	Uin		Uout	Rin	Rout
		(A)	(B)			
18.4-20.4	262	G 3" F	G 2 1/2" F	G 3" F	G 1" F	G 1" F

Blue Box reserves the right to alter specifications.

DIMENSIONAL DIAGRAMS
BETA REV 18.4-24.4

A4G202-A

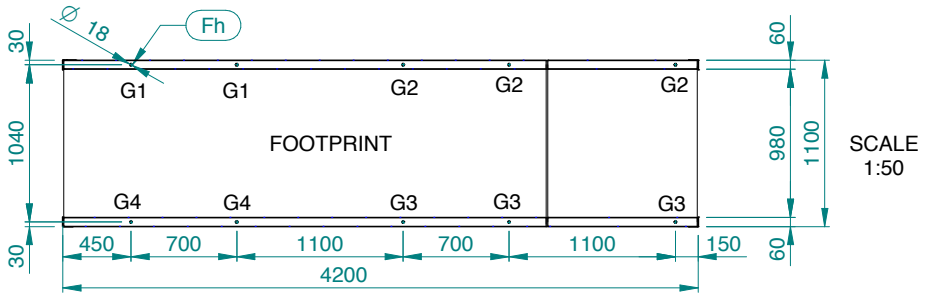

MODEL	WEIGHT(kg)	OPERATING WEIGHT (kg)	G1 (kg)	G2 (kg)	G3 (kg)	G4 (kg)
BETA REV 18.4	1730	1743	311	141	94	208
BETA REV 20.4	1755	1770	315	144	96	210
BETA REV 24.4	1828	1844	337	148	96	219
BETA REV 18.4 ST 1P-2P	1887	1925	293	186	127	200
BETA REV 20.4 ST 1P-2P	1925	1965	300	190	129	204
BETA REV 24.4 ST 1P-2P	1998	2039	321	194	129	214
BETA REV 18.4 DS	1791	1807	316	151	100	211
BETA REV 20.4 DS	1827,5	1846	323	155	103	213
BETA REV 24.4 DS	1903	1923	345	160	103	222
BETA REV 18.4 ST 1P-2P-DS	1968	2009	302	197	134	206
BETA REV 20.4 ST 1P-2P-DS	1995,5	2039	307	201	136	207
BETA REV 24.4 ST 1P-2P-DS	2073	2118	329	206	136	217
BETA REV 18.4 HP	1955	1968	322	152	120	254
BETA REV 20.4 HP	1985	2000	327	156	122	256
BETA REV 24.4 HP	2060	2076	349	160	122	266
BETA REV 18.4 HP-ST 1P-2P	2089	2127	302	195	154	238
BETA REV 20.4 HP-ST 1P-2P	2112	2152	306	199	155	239
BETA REV 24.4 HP-ST 1P-2P	2192	2233	328	204	155	250
BETA REV 18.4 HP-DS	1975	1991	325	157	122	252
BETA REV 20.4 HP-DS	2012,5	2031	332	161	124	256
BETA REV 24.4 HP-DS	2076	2096	351	166	124	262
BETA REV 18.4 HP-ST 1P-2P-DS	2123	2154	309	198	154	240
BETA REV 20.4 HP-ST 1P-2P-DS	2144,5	2188	311	204	158	240
BETA REV 24.4 HP-ST 1P-2P-DS	2225	2270	333	210	158	250

Blue Box reserves the right to alter specifications.

1021120302_Beta rev_31-03-2016

Blue Box Group S.r.l.
via Valletta,5 - 30010 Cantarana di Cona (VE) - Italy
tel. +39 0426 921111 - fax +39 0426 302222
www.blueboxgroup.it

BlueBox
A **Swegon Group** company