Zeta Rev HE FC

Air cooled freecooling chiller

R410A

35÷149 kW

General

High efficiency free-cooling chillers, with 2 models:

Zeta Rev HE FC
units with scroll compressors, 10 sizes from 50 to 150 kW

Zeta Rev HEi FC
units with scroll / inverter-driven compressor, 3 sizes from 36 to 93 kW

Configurations

LN: low-noise version
NG: unit without glycol on user side

Bullet points

- Patented free-cooling section.
- Lower refrigerant charge.
- Bluethink advanced control with integrated web server.
- Multilogic/Multifree function for multiple units' system (option).
- Blueye supervision system (option)
- Flowzer: system with variable water flow (options)
- HEi model: brushless DC inverter-driven scroll compressor, combined with conventional compressors.
- Glycol free version.

BlueBox

N. IT1855070
PATENTED FREECOOLING SOLUTION

Innovative Freecooling

Smart management of two sections
- Condenser, microchannel type
- Free-cooling, Cu-Al type

Each section is provided with dampers
- Adjustment of the cooling output, by modulation of both dampers' position and fans'speed
- Free-cooling coil completely independent from condensing section

external air temperature

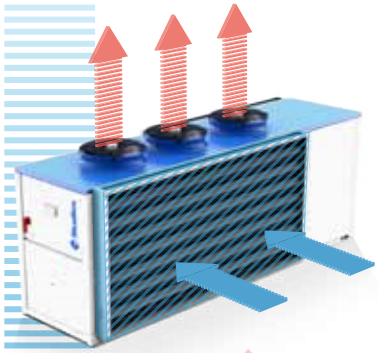

CHILLER MODE
managed with compressors; fans' speed modulated

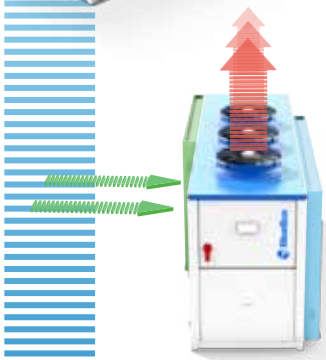

COMBINED MODE
managed with both the free-cooling section and compressor; maximized contribution of free-cooling by means of dampers.

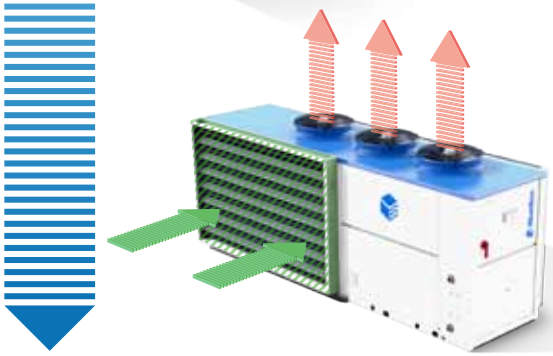

TOTAL FREE-COOLING MODE
managed with the free-cooling section only; compressor section is off.

Glycol free

NG version
Allows to separate the free-cooling circuit, with glycole, from the user side circuit.
Distribution of chilled water to the building is therefore less demanding, in terms of both pumping energy and installed cost.

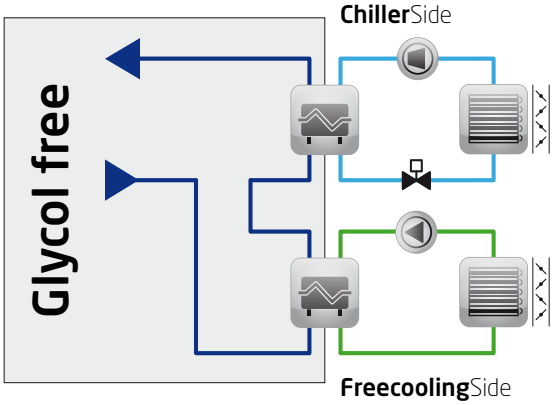

VERSATILE RANGE

EER up to **3,7**

NG version always available

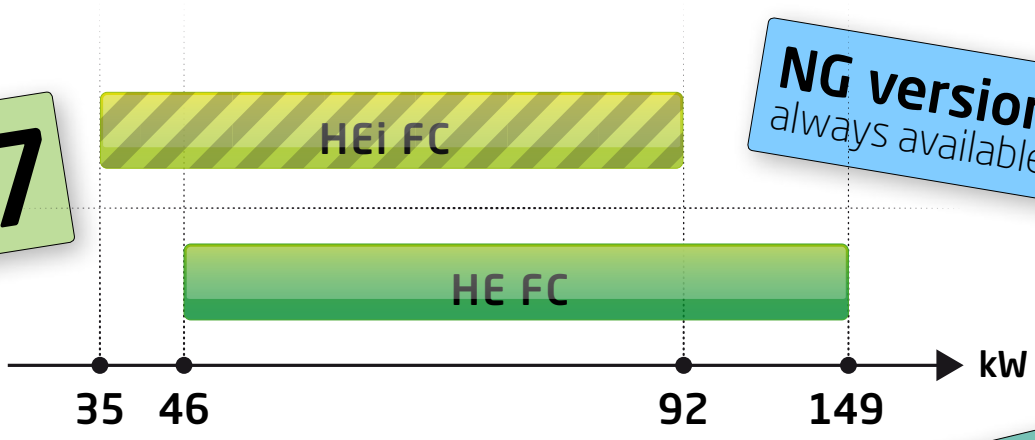

COMING SOON

Ambient air temperature 30°C; evaporator inlet/outlet water temperature 15-10 °C (glycol 30%)

TFT up to **2,7°C**

MICROCHANNEL ALUMINIUM COIL

Zeta REV HE FC units use this new generation of condensing coil as standard.

FEATURES & BENEFITS

- Extended life cycle
- less air side pressure drop

30% less refrigerant

EC AXIAL FANS

EC axial fans with electronically commutated brushless motor as option.

15%
energy saving per fan

DC INVERTER
SCROLL COMPRESSOR (HEi model)

Units with 1, 2 or 3 compressors, of which one brushless inverter DC type:

- higher energy efficiency at part load
- higher cooling capacity at peak load
- more accurate temperature control

BLUE THINK Control Platform

› USB, RS485 and Ethernet ports as standard
› Recording of unit parameters one month long
› Integrated web server as standard for remote management

MULTILOGIC/MULTIFREE FUNCTION

› Up to 32 units managed together with master / slave logic
› Different plant configurations
› Maximise the efficiency using the freecooling from stand-by unit in n+1 configuration.

FLOWZER

The new family of hydraulic management scalable options. Associated to the wide range of built-in pump modules (offered as options), FLOWZER provides the best-fitting solution for the water distribution to the system, at minimized operational cost:

› **Flowzer VP**: Costant water flow with inverter pump
› **Flowzer VD**: Constant delta P regulation with inverter pump
› **Flowzer VFPP**: Variable flow on primary circuit (HEi model only).

BLUEYE

› Supervision system by Blue Box that allows several function and advantages as monitoring one or more units, pumps, energy meters, valves, record parameters and graphs in the cloud

Rhönklinikum
Bad Neustadt - Germany

Blue Box technological product range

find out the complete product range on our web site and catalogues

Zeta Rev .Ei > 32÷91 kW

High efficiency air cooled chillers with brushless DC inverter scroll compressor.

Tetris FC > 97÷518 kW

High efficiency air cooled free cooling modular chillers.

Kappa Rev .Ei > 286÷1451 kW

High efficiency air cooled modular chillers with inverter screw compressors.

Kappa Rev FC > 320÷1300 kW

High efficiency air cooled free cooling modular chillers. Available also with inverter compressors.

Kappa V Evo FC > 325÷1178 kW

Air cooled freecooling chiller.

Tetris W FC/NG > 39÷634 kW

High efficiency water cooled free cooling chillers with integrated hydronic module.

Kappa Rev LGW > 240÷1020 kW

Low GWP, high efficiency air cooled modular chillers, also with free-cooling module.

Blue Box Group S.r.l.
Via Valletta, 5 - 30010 Cantarana di Cona, (VE) Italy
www.bluebox.it - info@bluebox.it
Phone +39 0426 921111 - Fax +39 0426 302222