GEYSER 2

6÷78 kW

General information

Dedicated heat pumps new series with Scroll compressors, with and without vapor injection.

/HT version in 15 sizes

Cooling capacity (A35;W7): 6÷73 KW

Heating capacity (A7;W45): 6÷78 KW

/MT version in 17 sizes

Cooling capacity (A35;W7): 6÷68 KW

Heating capacity (A7;W45): 7÷76 KW

GEYSER 2 is a complete dedicated heat pump series in R410A, which covers the range from 6 to 78kW with single and double compressors

Unique selling points

- Wide operating limits and power range
- Automatic management for domestic hot water
- Hws version available for all sizes
- Smarter defrosting management
- A class pumps available for single compressor models
- Modularity and full accessibility

INDEX

GEYSER 2 - SINGLE COMPRESSOR	3
GEYSER 2 - BI COMPRESSOR	7
DESCRIPTION OF THE FUNCTIONS AND ACCESSORIES	10
HEAT PUMP INSTALLATION TIPS	16
GEYSER 2 MT TECHNICAL DATA	18
GEYSER 2 HT TECHNICAL DATA	20
GEYSER 2 MT ELECTRICAL DATA	22
GEYSER 2 HT ELECTRICAL DATA	23
SOUND LEVELS - GEYSER 2 MT	28
SOUND LEVELS - GEYSER 2 HT	29
SOUND LEVELS - GEYSER 2 MT /LN	30
SOUND LEVELS - GEYSER 2 HT /LN	31
GEYSER 2 MT DIMENSIONAL LAYOUTS	32
GEYSER 2 HT DIMENSIONAL LAYOUTS	54

GEYSER 2 - SINGLE COMPRESSOR

HIGH EFFICIENCY AIR-WATER HEAT PUMPS WITH AXIAL FANS WITH A SINGLE SCROLL COMPRESSOR

PRODUCT DESCRIPTION

STRUCTURE

In galvanised sheet metal and painted with polyester powders RAL 7035 at 180°C, which confer high resistance to atmospheric agents.

The panels can be easily removed to allow total access to the internal components.

All the structures have a condensate drip tray with the relative drain.

GEYSER 2/HT COMPRESSOR

Hermetic scroll compressor, complete with circuit breaker protection included in the electric motor windings, sump heater and rubber anti-vibration supports. The compressor used in this series is specifically designed to run as a heat pump. Optimising the compression ratio to high values allows for a superior efficiency to be reached when compared with traditional scroll compressors.

The models in size 13 to 41 are equipped with a liquid injection compressor. Liquid injection allows the heat pump to run at very low outdoor temperatures while producing very hot water.

GEYSER 2/MT COMPRESSOR

Hermetic scroll compressor, complete with circuit breaker protection included in the electric motor windings, sump heater and rubber anti-vibration supports. The compressor used in this series is specifically designed to run as a heat pump. Optimising the compression ratio to high values allows for a superior efficiency to be reached when compared with traditional scroll compressors.

USER SIDE EXCHANGER

AISI 316 stainless steel braze-welded plate evaporator, housed inside a closed-cell insulating casing, which reduces heat loss and prevents condensation from forming.

The exchanger is equipped with a temperature probe for anti-freeze protection, with a temperature probe for the water inlet and outlet and with a blade flow switch supplied as standard.

SOURCE SIDE EXCHANGER

This consists of a coil with copper pipes and aluminium fins with a high exchange surface with fin spacing sized so as to maximise heat transfer and reduce the noise impact. The space of the fins in the exchanger has been increased so as to allow the unit to work at very low temperatures and very high moisture concentration.

The subcooler is found at the base of the exchanger, which is an additional cooling circuit that prevents the formation of ice in the lower part of the coil and facilitates the flow of condensate during the defrosting operations. The effects of the subcooler are: reduced defrosting operations and the safety of having a clean heat exchanger at the end of each defrosting operation.

A metal mesh protects the finned core.

FANS

Helicoidal fans coupled directly to the electric motor, made of plastic material with a blade profile equipped with WINGLET, a special shape in the end part of the blades, which allows a reduction in the noise and an increase in the aeraulic performance.

The control manages the fan speed through a speed regulator phase cut in order to optimise the operating conditions, efficiency and allow the unit to operate as a heat pump also for high outdoor temperatures.

Moreover, this adjustment has a reduced noise level effect on the unit. In fact, the control device will modulate the speed of the fans at night and during mid-season. This means that every time there it is possible, the machine will minimise the fan speed and also its noise level.

The fans are axial fans directly coupled to the 6-pole electric motor, with an IP 54 degree of protection, with shaped nozzles and a safety grille in accordance with EN 294.

COOLING CIRCUIT

It includes: a charging socket in the liquid and inlet line, liquid indicator, a solenoid valve, non-return valves, a dehydrator filter, 2 thermostatic expansion valves (1 for heat pump operation and 1 for chiller operation) equipped with an external pressure equalizer, pressure transducer, high and low pressure switches and a safety valve (excluding 7,9 and 11 for the /HT version and 8, 10 and 12 for the /MT version), liquid receiver and intake separator (sizes 22 to 41 for the /HT versione and 23 to 42 for the /MT version).

The models in the /HT version size 13 to 41 are equipped with an additional circuit for liquid injection to the compressor.

ELECTRIC CONTROL BOARD

The electric control board consists of:

- a main isolating switch and fuse protection of the auxiliary and power circuits
- a compressor remote control switch
- condensation/evaporation control with fan speed regulator
- pump relay or motor protection switch and remote control switch (in /1P, /1PS, /1PV or /1PVS version)
- potential free contacts for general alarm
- microprocessor control.

The standard power supply is:

- 230V/1~/50Hz for size 7 of the /HT version
- 230V/1~/50Hz for sizes 8 and 10 of the /MT version
- 400V/3N~/50Hz for sizes 9 to 41 of the /HT version
- 400V/3N~/50Hz for sizes 12 to 42 of the /MT version.

3-phase power supply is available as an accessory for the single phase models. Single-phase power supply is available as an accessory for certain 3-phase models.

CONTROL

Microprocessor control for the following functions:

- water temperature adjustment with inlet control
- anti-freeze protection
- compressor timing
- high pressure pre-alarm control
- alarm signals
- alarms reset
- remote on/off digital input
- summer/winter selection digital input.

The display is used to display the following information:

- temperature of the outlet water
- condensation temperature
- set and differential temperature settings
- description of the alarms
- pump and compressor operation counter.

The control integrates the following standard functions:

- automatic control of domestic hot water
- smooth defrosting.

Certain functions are only available with the unit adequately configured. Certain functions must be enabled from the control.

CHECKS AND SAFETY DEVICES

the units are equipped with the following safety devices:

- utility water temperature control probe (situated at the inlet of the utility heat exchanger)
- anti-freeze probe to activate the anti-freeze alarm (manually reset)
- low pressure switch (with automatic reset at limited intervals)
- low pressure switch (automatically reset at limited intervals)
- standard mechanical blade flow meter (manually reset)
- high pressure safety valve (excluding sizes 7, 9 and 11 of the /HT version and sizes 8, 10 and 12 of the /MT version)
- compressor over-heating protection
- control of the condensation pressure using the speed regulator for operation with low outdoor temperatures.
- control of the evaporation pressure using the speed regulator for operation with high outdoor temperatures in domestic hot water production or recovery.

INSPECTION

The units are inspected in the factory and supplied complete with oil and refrigerant fluid.

VERSIONS

/LN: SILENCED UNIT

As well as the components of the basic version, the unit has a completely sound insulated compressor compartment made of sound-absorbing material, which is used with sound impeding material.

This option is especially interesting when the installation prefers a horizontal air discharge.

/HWS: MULTIPURPOSE HEAT PUMP

The unit in this setup is equipped with 2 exchangers: 1 on the system side for air-conditioning and heating, and 1 dedicated exclusively to the production of domestic water.

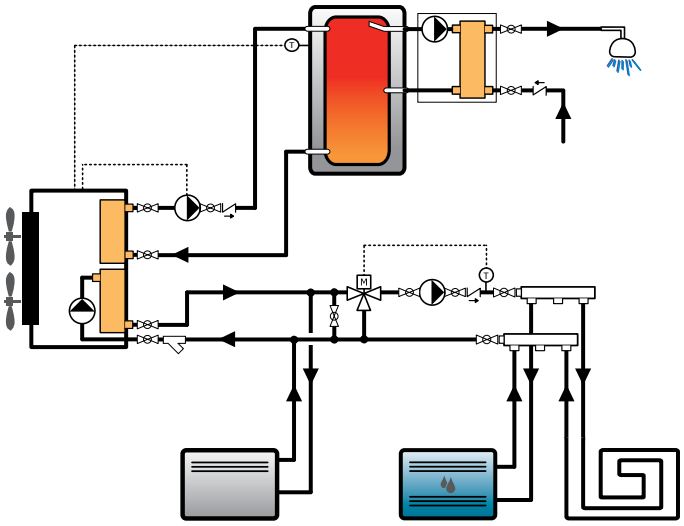

Sufficient cold or hot water can be produced on the unit system side exchanger to meet the heating and cooling requirements of the building according to the seasons.

The unit on the exchanger dedicated to the DHW produces hot water to be sent to a storage tank outside the machine, which is selected and sized according to the system requirements.

The unit runs in different modes according to the season: these are automatically switched (within the season) via the reading of the temperature probes and the set-point settings. Switching times and logic are designed to guarantee maximum system efficiency and reliability.

This configuration must be associated to an adequately sized boiler in which very hot water is stored. The boiler must have a well for the domestic water operating probe to be inserted in the upper part, through which the unit controller will monitor the amount of domestic hot water that must be produced.

Summer operation

There are 3 summer modes:

- Chiller mode: the unit only produces cold chilled water for the system.
- Chiller mode with simultaneous production of domestic hot water: the unit produces chilled water for the system and domestic hot water. The recovered power for the domestic water production is complete.
- Heat pump mode for domestic hot water production: when there is no cold water and the domestic water operating probe is required to run, the unit heats the water inside the

domestic water storage tank using the finned core coil as an evaporator. Using the hot external air as a source of heat guarantees the extremely high COP to be achieved.

Switching from one mode to another occurs entirely automatically according to a priority logic in the domestic hot water production and when there is load diversity, thereby recovering the condensation energy for the production of domestic hot water.

Winter operation
There are 2 winter modes:

- Heat pump mode for heating: the unit produces hot water to the system side exchanger for heating purposes.
- Heat pump for the production of domestic hot water: produces hot water to the connected exchanger of the domestic water storage tank.

Switching from one mode to another occurs entirely automatically according to a priority logic in the domestic hot water production.

In addition to the components of the basic version, the /HWS unit includes:

- a special exchanger for the production of domestic hot water
- a temperature probe to be positioned on the domestic water storage tank
- an electronic thermostatic valve (replaces the 2 mechanical thermostatic valves).

HYDRAULIC MODULE OPTIONS

/1P: unit with one pump
The unit includes a fix speed circulator with EC motor (sizes 7 to 17 of the /HT version and 8 to 20 of the /MT version) or a circulation pump (sizes 22 to 41 of the /HT version and 23 to 42 for the /MT version), an expansion tank, a hydraulic circuit water drain valve, a safety valve set at 6 bar that corresponds to the maximum operating pressure value allowed.

/1PV: unit with variable capacity pump
The unit includes, for all sizes, an A class circulator with EC motor, an expansion tank, a hydraulic circuit water drain valve, a safety valve set at 6 bar that corresponds to the maximum operating pressure value allowed.

The circulator with an EC motor has a permanent magnet rotor that guarantees very high efficiency levels for each operating condition.

Allows up to 25% of the power consumption of a normal pump of equal power to be saved. The permanent magnets instead of the windings allows the electric motor to be brushless, thereby optimising its efficiency.

If the unit is connected to a system equipped with valves two-way, the pump will vary its flow rate so as to maintain a constant pressure head. In this case the customer will have to provide a bypass or a 3-way valve suitably positioned to ensure a minimum flow rate equal to 50% of nominal flow.

/1PS: unit with pump and tank
In addition to the components of the /1P version, the unit includes an insulated inertial storage tank.

/1PVS: unit with pump and tank
In addition to the components of the /1PV version, the unit includes an insulated inertial storage tank.

/1R: unit with domestic side pump
The unit is equipped with a pump for the domestic side (supplied). This module can only be matched with the units in the /HWS version and can be combined with the /1P, /1PV, /1PS or /1PVS modules. The /HWS version units with no /1R module are equipped with consent to control an external pump.

The pump used for domestic hot water must be installed in a technical compartment and adequately protected against low temperatures and the risk of its hydronic circuit freezing.

STANDARD EQUIPMENT

- Smooth defrosting management
- Heat source integration/backup management
- Compressor stop for external air temperatures lower than the operating limits
- Condensation/evaporation control with fan speed regulator
- Flow meter (standard)
- Directive 97/23 EEC (PED) Certification
- Summer/winter selection from digital input
- Remote On/Off from digital input
- Condensate drip tray
- Coil protection grid.

ACCESSORIES

All the units can be configured with various accessories to better meet the requirements of the specific application in which they will be set. To check availability of accessories and compatibility of their size and configuration, please refer to the price list or selection software.

COOLING CIRCUIT ACCESSORIES

- electronic thermostatic valve (standard on the /HWS unit).

HYDRAULIC CIRCUIT ACCESSORIES

- filling unit with manometer
- anti-freeze resistance
  - basic version: electric heater on the utility exhanger
  - /1P and /1PV versione: electric heaters on the utility exchanger and heating cable on the pipes
  - /1PS and /1PVS versione: electric heaters on the utility exchanger and heating cable on the pipes
- additional heater
- 3-way valve to control the domestic hot water (supplied)
- hydraulically disconnected tank
- system pump with Pulse function
- filter.

ELECTRICAL ACCESSORIES

- electric power supply different from the standard one
- maximum and minimum voltage relays
- double set-point from the digital input
- RS485 serial interface
- remote user terminal
- electronic soft starter
- EC electronic fans
- compensaiton of the setpoint according to the external air temperature
- automatic control of the domestic hot water
- domestic hot water operating probe (standard on the /HWS unit)
- anti-legionella function
- heat source integration/backup management
- domestic water production with timer
- individual operating potential free contacts
- Miniboss S
- Miniboss M

VARIOUS ACCESSORIES

- rubber anti-vibration mounts
- wooden cage packaging.

GEYSER 2 - BI COMPRESSOR

HIGH EFFICIENCY AIR-WATER HEAT PUMPS WITH AXIAL FANS AND SCROLL COMPRESSORS CONNECTED IN TANDEM

PRODUCT DESCRIPTION

STRUCTURE

In galvanised sheet metal and painted with polyester powders RAL 7035 at 180°C, which confer high resistance to atmospheric agents.

The panels can be easily removed to allow total access to the internal components.

All the structures have 2 condensate drip tray (1 per coil) with the relative drain.

GEYSER 2/HT COMPRESSOR

Hermetic scroll compressors in tandem configuration, complete with circuit breaker protection included in the electric motor windings, oil level indicator, crankcase heater and rubber anti-vibration mounts. The compressors used in this series are specifically designed to run as heat pumps. Optimising the compression ratio to high values allows for a superior efficiency to be reached when compared with traditional scroll compressors. The compressors have a liquid injection system: this allows the heat pump to run at very low outdoor temperatures while producing very hot water.

GEYSER 2/MT COMPRESSOR

Hermetic scroll compressors in tandem configuration, complete with circuit breaker protection included in the electric motor windings, oil level indicator, crankcase heater and rubber anti-vibration mounts. The compressors used in this series are specifically designed to run as a heat pump. Optimising the compression ratio to high values allows for a superior efficiency to be reached when compared with traditional scroll compressors.

USER SIDE EXCHANGER

AISI 316 stainless steel braze-welded plate evaporator, housed inside a closed-cell insulating casing, which reduces heat loss and prevents condensation from forming.

The exchanger is equipped with a temperature probe for anti-freeze protection, with a temperature probe for the water inlet and outlet and with a blade flow switch supplied as standard.

SOURCE SIDE EXCHANGER

This consists of 2 coils with copper pipes and aluminium fins with a high exchange surface with fin spacing sized so as to maximise heat transfer and reduce the noise impact. The space of the fins in the exchanger has been increased so as to allow the unit to work at very low temperatures and very high moisture concentration.

The subcooler is found at the base of the exchanger, which is an additional cooling circuit that prevents the formation of ice in the lower part of the coil and facilitates the flow of condensate during the defrosting operations. The effects of the subcooler are: reduced defrosting operations and the safety of having a clean heat exchanger at the end of each defrosting operation.

A metal mesh protects the finned core.

FANS

A helicoidal fan coupled directly to the electric motor, made of plastic material with a blade profile equipped with WINGLET, a special shape in the end part of the blades, which allows a reduction in the noise and an increase in the aeraulic performance.

The control manages the fan speed through a speed regulator phase cut in order to optimise the operating conditions, efficiency and allow the unit to operate as a heat pump also for high outdoor temperatures.

Moreover, this adjustment has a reduced noise level effect on the unit. In fact, the control device will modulate the speed of the fans at night and during mid-season. This means that every time there it is possible, the machine will minimise the fan speed and also its noise level.

The fan is an axial fan directly coupled to the 6-pole electric motor, with an IP 54 degree of protection, with shaped nozzles and a safety grille in accordance with EN 294.

COOLING CIRCUIT

It includes: a charging socket in the liquid and inlet line, liquid indicator, a solenoid valve, non-return valves, a dehydrator filter, 2 thermostatic expansion valves (1 for heat pump operation and 1 for chiller operation) equipped with an external pressure equalizer, pressure transducer, high and low pressure switches and a safety valve, liquid receiver and intake separator.

ELECTRIC CONTROL BOARD

The electric control board consists offrom:

- a main isolating switch and fuse protection of the auxiliary and power circuits
- remote switches for compressors
- condensation and evaporation control fan speed regulator
- pump relay or motor protection switch and remote control switch (in /1P or /2P version)
- potential free contacts for general alarm
- microprocessor control.

400V/3N~/50Hz power supply for all sizes.

CONTROL

Microprocessor control for the following functions:

- water temperature adjustment with inlet control
- anti-freeze protection
- compressor timing
- high pressure pre-alarm control
- alarm signals
- alarms reset
- remote on/off digital input
- summer/winter selection digital input.

The display is used to display the following information:

- temperature of the outlet water
- condensation temperature
- set and differential temperature settings

- description of the alarms
- pump and compressor operation counter.

The control integrates the following standard functions:

- automatic control of the domestic hot water
- smooth defrosting.

Certain functions are only available with the unit adequately configured. Certain functions must be enabled from the control.

CHECKS AND SAFETY DEVICES

- utility water temperature control probe (situated at the inlet of the utility heat exchanger)
- anti-freeze probe to activate the anti-freeze alarm (automatically reset at limited intervals)
- high pressure switch (with manual reset)
- low pressure switch (automatically reset at limited intervals)
- standard mechanical blade flow meter (manually reset)
- high pressure safety valve
- compressor over-heating protection
- control of the condensation pressure using the speed regulator for operation with low outdoor temperatures.
- control of the evaporation pressure using the speed regulator for operation with high outdoor temperatures in domestic hot water production or recovery
- compressor over-heating protection.

INSPECTION

The units are inspected in the factory and supplied complete with oil and refrigerant fluid.

VERSIONS

/LN: SILENCED UNIT

As well as the components of the basic version, the unit has a completely sound insulated compressor compartment made of sound-absorbing material, which is used with sound impeding material.

/HAD: HORIZONTAL AIR DISCHARGE

This layout is available only for units with two compressors and involves the installation of standard fan on the side of the unit rather than on the roof.

/HWS: MULTIPURPOSE HEAT PUMP

The unit in this setup is equipped with 2 exchangers: 1 on the system side for air-conditioning and heating, and 1 dedicated exclusively to the production of domestic water.

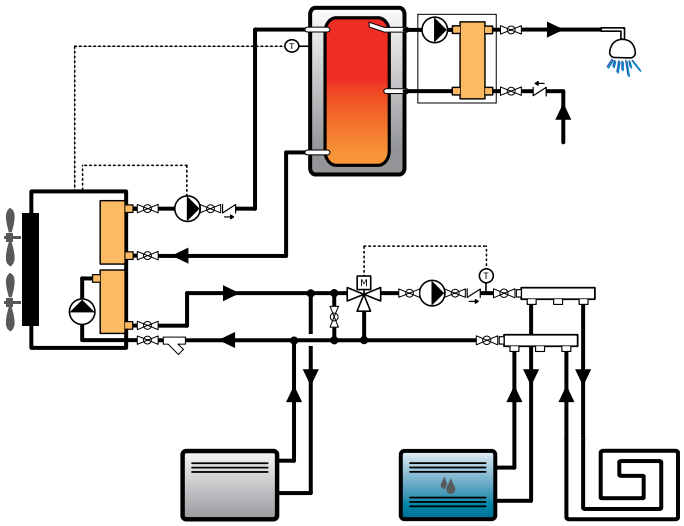

Sufficient cold or hot water can be produced on the unit system side exchanger to meet the heating and cooling requirements of the building according to the seasons.

The unit on the exchanger dedicated to the DHW produces hot water to be sent to a storage tank outside the machine, which is selected and sized according to the system requirements.

The unit runs in different modes according to the season: these are automatically switched (within the season) via the reading of the temperature probes and the set-point settings. Switching times and logic are designed to guarantee maximum system efficiency and reliability.

This configuration must be associated to an adequately sized boiler in which very hot water is stored. The boiler must have a well for the domestic water operating probe to be inserted in the upper part, through which the unit controller will monitor the amount of domestic hot water that must be produced.

Summer operation

There are 3 summer modes:

- Chiller mode: the unit only produces cold chilled water for the system.
- Chiller mode with simultaneous production of domestic hot water: the unit produces chilled water for the system and domestic hot water. The recovered power for the domestic water production is complete.
- Heat pump mode for domestic hot water production: when there is no cold water and the domestic water operating probe is required to run, the unit heats the water inside the domestic water storage tank using the finned core coil as an evaporator. Using the hot external air as a source of heat guarantees the extremely high COP to be achieved.

Switching from one mode to another occurs entirely automatically according to a priority logic in the domestic hot water production and when there is load diversity, thereby recovering the condensation energy for the production of domestic hot water.

Winter operation

There are 2 winter modes:

- Heat pump mode for heating: the unit produces hot water to the system side exchanger for heating purposes.

- Heat pump for the production of domestic hot water: produces hot water to the connected exchanger of the domestic water storage tank.

Switching from one mode to another occurs entirely automatically according to a priority logic in the domestic hot water production.

In addition to the components of the basic version, the /HWS unit includes:

- a special exchanger for the production of domestic hot water
- a temperature probe to be positioned on the domestic water storage tank
- an electronic thermostatic valve (replaces the 2 mechanical thermostatic valves).

HYDRAULIC MODULE OPTIONS

/1P: unit with one pump
The unit includes a circulation pump installed inside the unit.

/2P: unit with two pumps
The unit includes 2 circulation pumps installed inside the unit. Each pump is a reserve of the other, controlled in timed rotation and with automatic switchover in the event of a fault.

/1R: unit with domestic side pump
The unit is equipped with a pump for the domestic side (supplied). This module can only be matched with the units in the /HWS setup and can be combined with the /1P or /2P modules. The HWS units with no /1R module are equipped with consent to control an external pump.

The /1R module is installed inside the unit.

ACCESSORIES

All the units can be configured with various accessories to better meet the requirements of the specific application in which they will be set. To check availability of accessories and compatibility of their size and configuration, please refer to the price list or selection software.

STANDARD EQUIPMENT

- Smooth defrosting management
- Heat source integration/backup management
- Compressor stop for external air temperatures lower than the operating limits
- Condensation/evaporation control with fan speed regulator
- Flow meter (standard)
- Directive 97/23 EEC (PED) Certification
- Summer/winter selection from digital input
- Remote On/Off from digital input
- Condensate drip tray
- Coil protection grid.

COOLING CIRCUIT ACCESSORIES

- electronic thermostatic valve (standard on the /HWS unit).

HYDRAULIC CIRCUIT ACCESSORIES

- filling unit with manometer
- anti-freeze resistance
  - basic version: electric heater on the utility exhanger
  - /1P and /2P versione: electric heater on the utility exchanger and heating cable on the pipes
- 3-way valve to control the domestic hot water (supplied)
- system pump with Pulse function
- water filter.

ELECTRICAL ACCESSORIES

- electric power supply different from the standard one
- maximum and minimum voltage relays
- double set-point from the digital input
- RS485 serial interface
- remote user terminal
- electronic soft starter
- EC electronic fans
- compensaiton of the setpoint according to the external air temperature
- automatic control of the domestic hot water
- domestic hot water operating probe (standard on the /HWS unit)
- anti-legionella function
- heat source integration/backup management
- domestic water production with timer
- individual operating potential free contacts
- Miniboss S
- Miniboss M

VARIOUS ACCESSORIES

- rubber anti-vibration mounts
- wooden cage packaging.

DESCRIPTION OF THE FUNCTIONS AND ACCESSORIES

Remote ON/OFF from digital input (standard)

All the units come with this function as standard. It consists of a remote contact for turning the machine on and off by means of a signal that can be taken inside the building or piloted by a Building Management System (BMS).

Summer/winter selection from digital input (standard)

This function is standard for all heat pumps. When the unit is switched on, an operating mode must be set as either heat pump or chiller. Through this remote contact, the operating mode can be modified even inside the building and without direct access to the microprocessor control.

Smooth defrosting (standard)

The control manages the defrosting according to a variable interval threshold, depending on the pressures inside the unit and the external air temperature. Crossing this information, the control can identify the presence of ice on the coil by activating the defrosting sequence only when necessary, so as to maximise the energy efficiency of the unit.

The dynamic management of the defrosting threshold allows for the function to be implemented only when the ice deposited on the coil will affect the performance in outdoor air temperatures below -5°C, when the absolute humidity of the air is very low.

Controlling the auxiliary heat source (standard)

The controller can manage an external heat source, which can be of integration or backup type, depending on the type of hydraulic connection. In the diagram below, for example, the boiler will be backup to the heat pump.

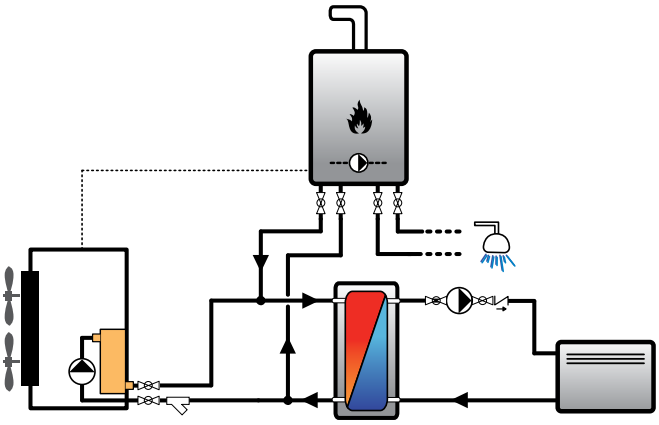

The auxiliary heat source will be activated when the outdoor air temperature drops below a threshold that can be set from the control and only when the heat pump is insufficient to meet the load. Activation occurs by closing a potential free contact.

It is also possible to set the unit for the controller to switch the compressors off when the unit operates in heat pump mode and the outdoor air temperature drops below a minimum set temperature: the controller will stop the compressors before the unit goes into low pressure alarm, thereby preventing having to manually reactivate the machine.

This function is particularly useful when the heat pump is installed in an area where the external air temperature will definitely drop below the minimum temperature allowed by the threshold (in accordance with the set-point). When the external air temperature returns above the set temperature threshold, the unit restarts automatically without requiring any intervention.

Units with an integrated pump must always be kept running in order to prevent the formation of ice and to ensure correct operation of the temperature probes and anti-freeze safety devices.

The shutdown temperature must be configured according to the higher set-point temperature and the operating limits of the machine.

A shutdown temperature other than the default can be set provided it is compatible with the unit's operating limits.

Standard programming involves the

- /MT units having the heating set-point set at 30/35° with a shutdown temperature of -16°C
- /HT units having the heating set-point set at 40/45° with a shutdown temperature of -20°C

If the unit must also be used to produce domestic hot water, the shutdown temperature must consider the higher water set-point and the operating limits allowed.

Automatic domestic hot water control (standard)

This function allows the unit to control the temperature inside a storage tank for the domestic hot water and a 3-way valve (accessory) outside the unit by means of a domestic water operating probe (accessory). Priority is always given to the production of hot water for domestic use.

The request for the function to be activated must be made when placing the order, however, it can be configured at a later stage (by qualified and authorised technical personnel) provided that the unit is connected with a suitable hydraulic circuit.

The request made when placing the order for special accessories to control the domestic hot water automatically entails the activation of the "automatic domestic hot water control" funtion.

The heat pump normally operates on the system to meet the comfort requirements of the building, however, when the water temperature inside the tank drops below a set threshold, the control manages the production of domestic hot water: if the unit is operating as a heat pump for heating, the 3-way valve will be switched and the set-point changed; if on the other hand, the unit is producing chilled water for air conditioning, the control switches the unit to heat pump mode, assigns it the set-point for domestic hot water (usually higher than the set-point of the system) and turns the 3-way valve in the right position.

Once the temperature inside the domestic water tank has reached the set value, the unit automatically returns to the water production for the heating and air conditioning system.

Description of the winter mode

The following conditions occur in winter:

- Heating request: the temperature of the unit inlet water

coming from the system is lower than that expected, therefore, the control switches the compressor on and the unit will run until the set-point temperature is reached.

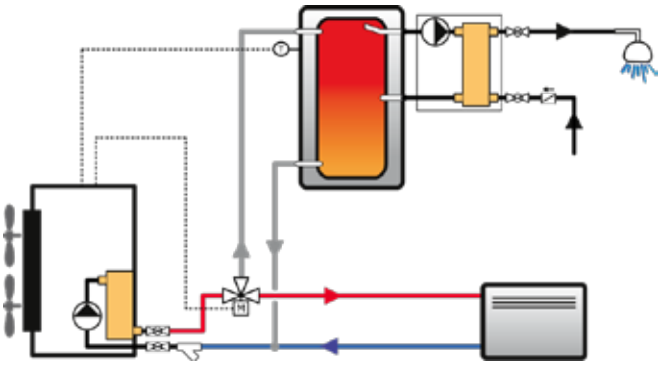

The compressor stops when the desired temperature is reached and only the circulation pump will keep running, which will keep the water circulating in the system. The unit will wait in this state until the water inlet temperature drops again.

- Domestic hot water request: let us suppose that the unit is producing hot water for the heating system (45°C) and receives the request to produce hot water from the domestic water operating probe in the storage tank since the water temperature has dropped below the set limit, (e.g. 55°C).
- Since the hot water is controlled with priority logic, the control will change the set-point bringing it to 55°C and switch the 3-way valve.

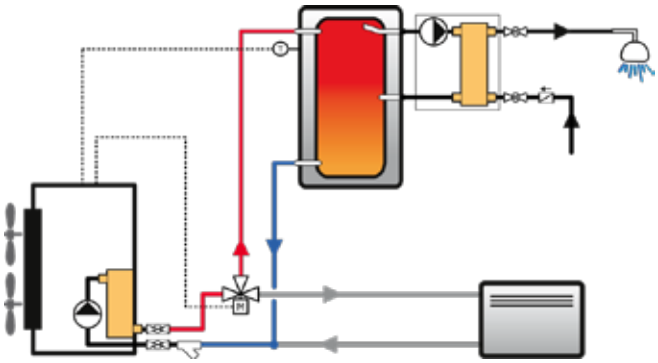

As soon as the water inside the tank will reach the required 55°C, the control will switch the 3-way valve once again to work on the system and bring the set-point back to 45°C.

If the defrosting process must be implemented, regardless of the mode the unit is running in, it will force the 3-way valve to be switched towards the system, which is less sensitive to the reduction in temperature due to the greater inertia.

Description of the mid-season mode

The heating and air conditioning system is not active during the mid-season and therefore, the heat pump is solely dedicated to the production of domestic hot water.

The 3-way valve is firmly positioned on the domestic hot water tank, whereas the pump and heat exchanger will only be activated on demand from the domestic water operating probe.

When the domestic water set-point is reached, the compressor and the pump will be switched off and the control will remain in stand-by for the next request.

This function is activated by setting the unit to the "domestic hot water only" function. For further information refer to the wiring diagram supplied with the unit.

Description of the summer mode

The following conditions occur in summer:

- Only cooling: the temperature of the unit inlet water coming from the system is higher than that expected, therefore, the control switches the compressor on and the unit will run until the set-point temperature is reached.

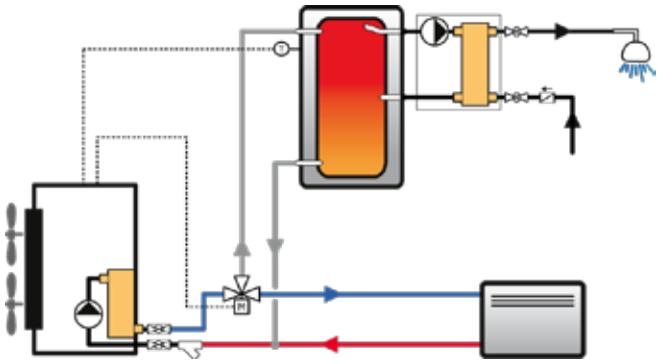

The unit then stops and only the pump will keep running, which will keep the water circulating in the system. The unit will wait in this state until the water inlet temperature rises again.

- Domestic hot water request: let us suppose that the unit is producing chilled water for the air conditioning system (7°C) and receives the request to produce hot water from the domestic water operating probe in the storage tank since the domestic water temperature has dropped below the set limit, (e.g. 55°C).

  Since the domestic hot water is controlled with priority logic, the control will change the unit mode from chiller to heat pump, set the set-point to 55°C and switch the 3-way valve.

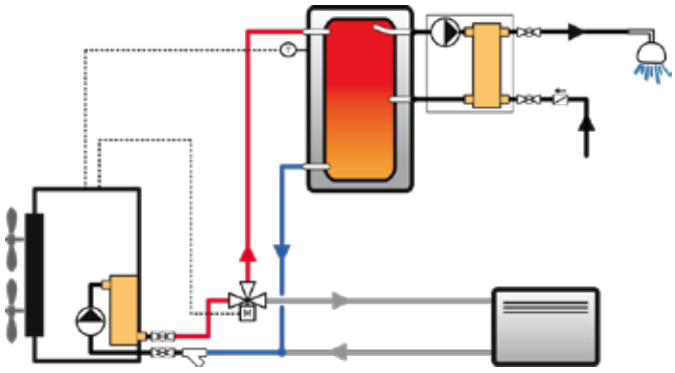

As soon as the water inside the tank will reach the required 55°C, the control will switch the 3-way valve once again to cihller mode, turn the 3-way valve for it to work on the system and bring the set-point back to 7°C.

Domestic water operating probe (accessory)

The controller requires this accessory for the production of domestic hot water: it consists of a temperature probe with

a 6 m cable to be placed in a special well in the tank for the production of domestic water. Read the "Heat pump installation tips" section to set it in the correct position.

Standard on HWS units.

Hydraulically disconnected tank (accessory)

If the unit must also be used for the production of domestic hot water using the 3-way valve and is equipped with an inertial tank (/1PS and /1PVS units), the "Hydraulically disconnected tank" accessory must be included.

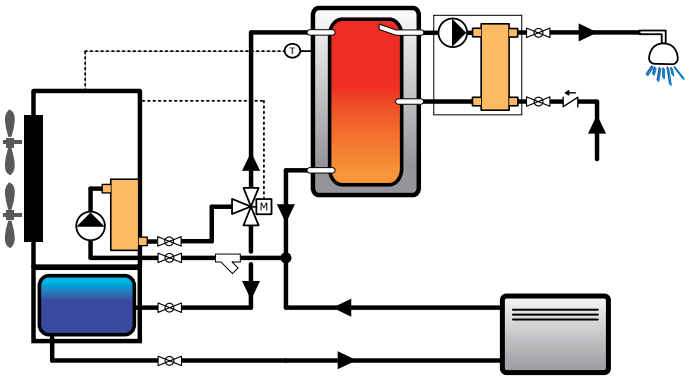

The unit will be set-up with the mechanically connected tank, however, it will have a hydraulic inlet and outlet that are not connected to unit. This will allow the 3-way valve to be inserted corrected, thereby avoiding the inertial tank from being crossed during the production of the domestic hot water.

Anti-legionella function (accessory)

Anti-legionella cycles may have to controlled, depending on the type of tank chosen for the production of domestic hot water. The controller can handle activating an auxiliary heat source that will perform the thermal shock on the hot water tank, according to programmed intervals with a weekly timer.

System pump with Pulse function (accessory)

As standard, the unit is set to keep the system side circulation pump always on, even if it reaches the set temperature.

When the unit is equipped with this accessory and the set-point is reached, the controller will switch the pump off, reactivating it periodically for sufficient time to detect the temperature of the water. If the controller verifies that the water temperature is still in set-point conditions, it will then turn the pump off again. Otherwise, the controller will reactivate the compressors to meet the system requirements.

Hence, this accessory allows the electrical consumption due to pumping to be significantly reduced, especially during mid-season when the load is extremely low.

The "anti-freeze" accessory must be present for this accessory to be applied.

Domestic water production with timer (accessory)

If this accessory is present, 2 temperatures can be set for the domestic water by associating different time bands: Normal and Saving. This allows you to decide when the heat pump is to concentrate on the production of hot water, however, always keeping the minimum Saving temperature, which is always managed with priority logic.

For example, focusing the production of water at Normal temperature at night, the better electricity rates will be taken advantage of and production of hot water just before the time when consumption is higher will be guaranteed.

With this system, the unit will still never cease to control the temperature inside the domestic water tank and if there is occasional use of hot water out of the usual times, the unit will give priority to the production of domestic water until the water in the tank returns to a temperature that is equivalent to the Saving set-point.

Electronic thermostatic valve (accessory)

This accessory is particularly suitable for units that operate in very unstable heat load conditions or in conditions where the outdoor temperature is highly variable or the operating mode is changed often, as in the case of combined air conditioning, heating and production of hot water. Using the electronic thermostatic valve allows the following:

- to maximise the heat exchange to the utility exchanger
- to minimise the response time of the cooling circuit to variations in load and operating conditions
- to optimise the superheating regulation
- to maximise the energy efficiency.

EC fans (accessory)

The units can be requested with EC fans, a brushless motor with electronic switchover. These motors with permanent magnets rotor guarantee very high levels of efficiency for every work condition and allow for 15% savings on the absorbed power per fan.

Moreover, through a 0-10V analogue signal sent to every fan, the microprocessor allows the condensation/evaporation to be controlled by means of continuous air flow regulations as the outdoor air temperature varies and a consequent reduction in electrical consumption and noise emission.

MINIBOSS S/M (accessory)

In applications in which there is:

- the need to guarantee continuous system operation and therefore, redundancy must be foreseen by means of a reserve machine
- a system that will be activated for parts and will therefore require a progressive increase in the installed power
- there is no physical space to install one unit that guarantees all the power, however, a number of smaller units can be installed
- in general, the MINIBOSS accessory, which is a control panel provided with the unit, can be used to combine several units and to coordinate the operation and rotation. This allows you to manage multiple units connected in parallel and coordinated by one supervisor in a rational and efficient way.

MINIBOSS S

The Miniboss S allows you to connect up to 4 units in parallel: the control allows you to enable and disable them in power steps and rotate them in operation, thereby allowing all units to be used in an identical manner.

The connected units must all be the same. The Miniboss S cannot control units that have the domestic water control active.

The following can be controlled directly from the Miniboss S panel:

- the summer/winter selection of all the machines
- the ON/OFF of the single units or the entire system.

This accessory is supplied in an electrical panel together with the unit (to be installed in a technical compartment), and must be placed on one of the machines connected in parallel and all connected units must have the same configuration.

When placing the order you must specify the number of units that must be controlled so as to allow for the proper programming of the supervisor. In addition, the hydraulic circuit that connects the units must comply with one of the following formats.

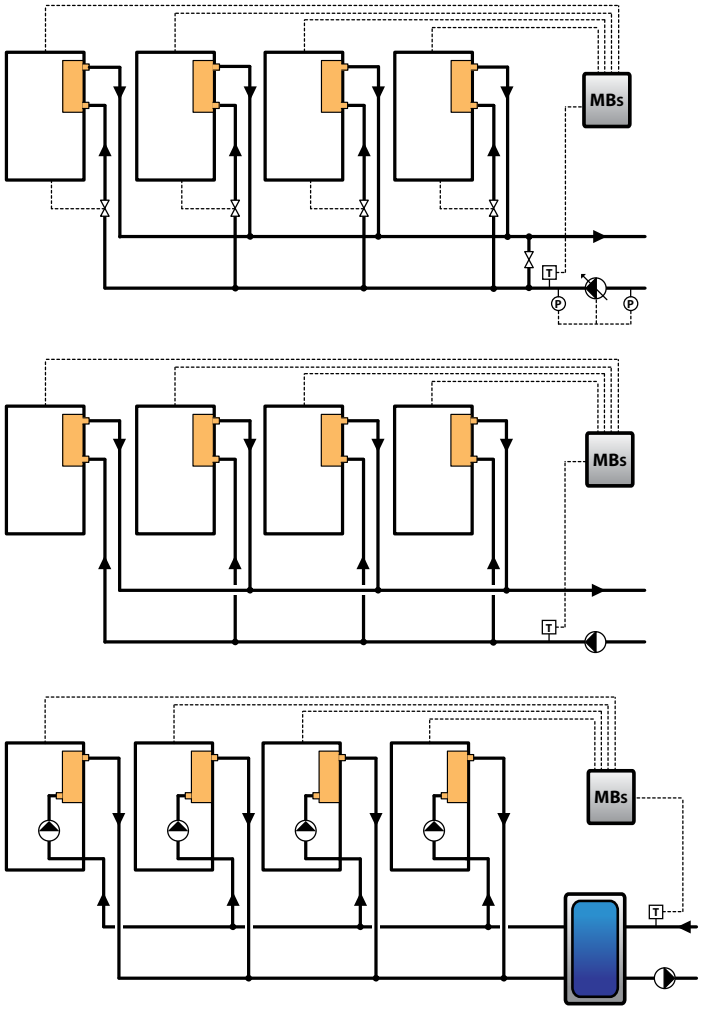

For further information regarding the use, refer to the specific documentation.

MINIBOSS M

The Miniboss M allows a maximum of 4 unita in parallel to be controlled. The main functions are:

- controlling units with HWS configurations
- control units with "automatic domestic hot water control" logic
- control systems with a hot/cold tank to heat/air condition and a hot tank for the production of domestic water.

Besides that also implemented by the Miniboss S,

- the set-point of the system
- the DHW set-point
- use a compensation climatic of the system set-point
- the summer/winter selection of all the machines
- the ON/OFF of the single units or the entire system
- 3-way valve switchover
- control the operation of pumps outside the units.

This accessory is supplied in an electrical panel together with the unit (to be installed in a technical compartment), and must be placed on one of the machines connected in parallel and all connected units must have the same configuration.

When placing the order you must specify the number of units that must be controlled so as to allow for the proper programming of the supervisor. In addition, the hydraulic circuit that connects the units must comply with one of the following formats.

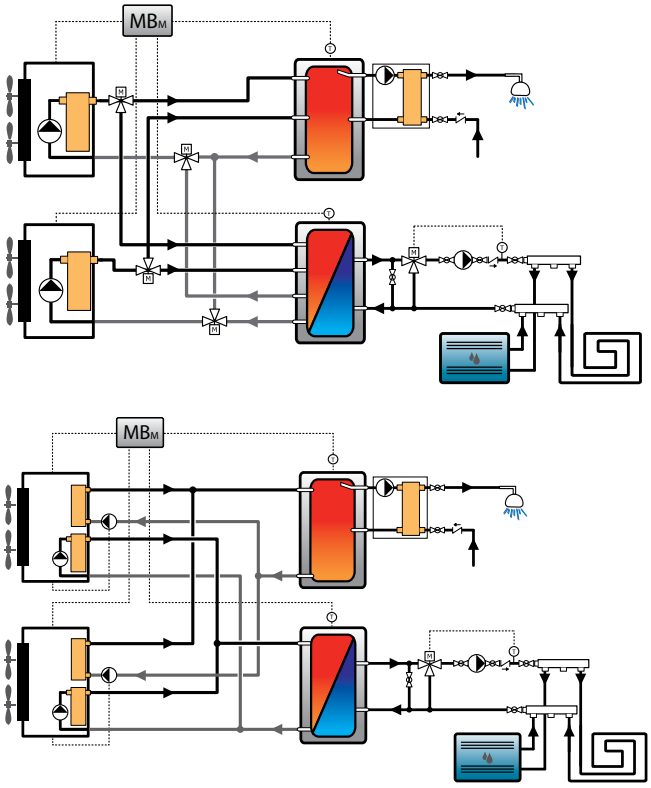

For further information regarding the use, refer to the specific documentation.

Filling unit with manometer (accessory)

Thisaccessoryallowsthehydraulicsystemtobefilledautomatically and the correct working pressure to be adjustmented, which can always be verified via the manometer, and continuously

maintenance maintains this pressure, topping-up the water, if necessary.

Anti-freeze heater (accessory)

This accessory consists of heaters fitted on the utility exchanger, pump and tank (depending on the machine configuration) to prevent damage to the hydraulic components due to the formation of ice when the machine is out of use. The power of the anti-freeze heaters is only a few Watts, depending on the model of the unit, which is sufficient to prevent the components from malfunctioning.

The controller monitors the outlet probe of the exchanger (even when the unit is in standby) and when this detects a water temperature of 5°C or less (or 2°C below the set-point temperature, with a differential of 1°C) and triggers the anti-freeze heater.

When the temperature of the outlet water reaches 4°C (or 3°C below the set-point), it also triggers the anti-freeze alarm that stops the compressor, whilst keeping the the heaters active.

The anti-freeze heaters are located in the evaporator (the 1PS version also has an anti-freeze heater installed on the tank, on the pipes and on the pump volute that will be insulated), and on any recovery heat exchangers.

Additional heater (accessory)

This is an electrical heater inserted in the inertial tank of the hydronic module that helps the heat pump fulfil its purpose when the power of the unit is insufficient.

The capacity of the heater depends on the size of the machine.

This accessory is only available with the hydraulic module with tank.

Double set-point from digital input (accessory)

The double set-point allows you to set 2 different operating temperatures for the heating mode and a set-point for the cooling mode. If a double set-point is required for both modes, an electronic thermostatic valve must be installed.

The set-point temperatures must be specified when placing the order. The set-point can be changed from the keypad or digital input.

RS485 serial interface (accessory)

The growing diffusion of domotic and BMS (Building Management System) systems has led to the need to integrate all the system components under one supervision. To meet this requirement, the unit can be equipped with an RS485 serial board with MODBUS protocol.

Remote user terminal (accessory)

This accessory consists of a replica of the remote control panel from which the unit configuration can be completed and all its parameters can be viewed. Passwords must be entered to access the masks that enable the various editing levels.

Soft-starter (accessory)

The units are equipped with the technology required to minimise peak current, however, the unit can also be fitted with a soft-starter accessory as a further precaution. It is an electronic control device that monitors the start-up of the electric motors and reduces the normal peak current of the compressor by 40%.

Domestic hot water 3-way valve (accessory)

It is an on/off 3-way valve that combined with the "automatic domestic hot water control" function, it allows the machine to control 2 separate circuits for comfort and production of domestic hot water, switching automatically from one to another, according to the system requirements.

The 3-way domestic hot water valve must be installed in a technical compartment.

Compensation of the set-point depending on the external temperature (accessory)

The controller allows you to change the set-point of the unit when in chiller mode and in heat pump mode according to the external temperature. Compensation can be positive or positive: positive compensation occurs when there is an increase in the outdoor air temperature and the operating set also increases; whereas, negative compensation occurs when there is an increase in the air temperature and the set decreases.

If the unit is also used for the production of domestic hot water the climatic adjustment will not affect the temperature of the domestic water set.

Unless specified otherwise when placing the order, standard programming involves negative compensation (for both set-points) as shown in the diagrams below. All the settings can be modified directly by the controller device.

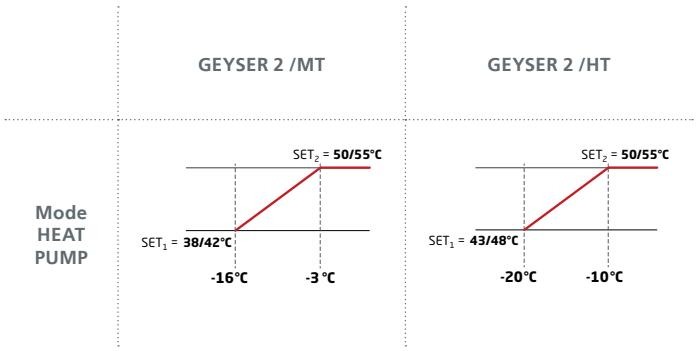

Maximum and minimum voltage relays (accessory)

This device continuously monitors the supply voltage of the unit, thereby verifying that it remains within a permissible range. When the voltage goes exceeds or drops below the range, the device stops the unit to avoid damaging the electric motors.

The device also monitors the phase sequence.

I

HEAT PUMP INSTALLATION TIPS

Using a heat pump for air conditioning, heating and production of domestic hot water has been an established practice for years and has undoubted advantages.

By its nature, the heat pump is strongly affected by the characteristics of the system, the selected operating conditions and the choices made for its installation and connection.

Below are some tips that increase the efficiency and reliability of the system:

CHOOSING THE CAPACITY OF THE HEAT PUMPS CORRECTLY

The heat pump must always be selected in excess, guaranteeing to exceed the maximum load besides the project load and possibly being able to operate even at lower temperatures than those of the project.

An integration or backup must also be contemplated, which can replace or help the heat pump in harsher operating conditions.

CHOOSING THE PROPER OPERATING TEMPERATURES

Heat pumps guarantee maximum efficiency, and therefore the economic advantage in using them, since the design of the system is aimed at choosing high water temperatures for air conditioning and low ones for heating.

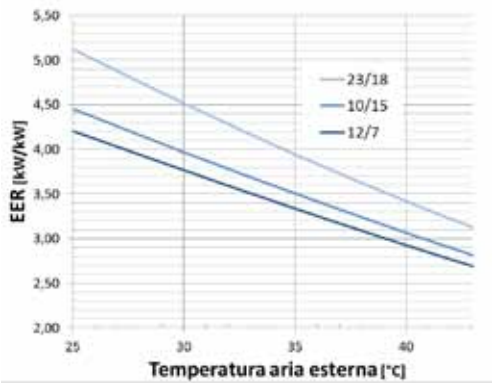

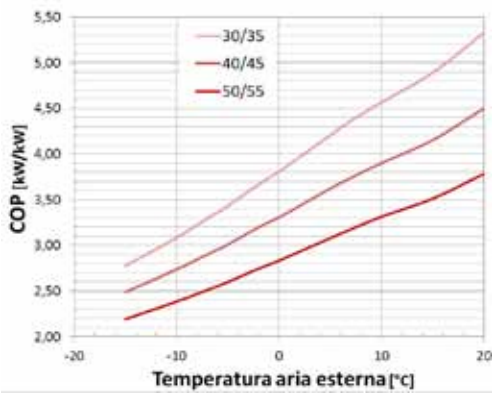

As can be seen from the example diagrams above, even a small variation in the temperature leads to an immediate improvement in the EER and COP.

CHOOSING THE PROPER TEMPERATURE FOR THE DOMESTIC WATER

For the same reasons in the previous point, the choice of the tank for the production of domestic water is to be made so as to maintain the set-point for the production of hot water as low as possible. This will allow the efficiency of the system to be increased and also maximise the operating limits of the unit, thereby ensuring the production of domestic water even for very low temperatures.

In general it is not advisable to set the unit set-points the limit of the permissible operating conditions, especially in the heat pump mode, for the following reasons:

- Setting the water set-point at the maximum temperature limit reduces the operating limits of the unit.
- The water filter must always be present in the water inlet of the unit otherwise the warranty will be rendered nul and void. With the passage of time the filter element can become dirty and this will increase the pressure drops and consequently reduce the water flow. Lowering the water flow will lead to an increase in the thermal gradient of the utility exchanger that can go from 4/5°C to 9/10°C, however, since the unit controls the set-point on the return temperature, this may involve the intervention of the safety devices if the unit operates at the limits of the allowed operating conditions.
- If the heat pump is connected directly (without intermediate circuit breakers) to a hydraulic circuit divided into areas, the pressure drop of the circuit may increase on closure of one or more areas, thereby leading to a decrease of flow and then to a increase of the thermal head to the heat exchanger. As before, if the heat pump is set to operate at the permissable limits of the operating conditions, this can lead to an intervention of the safety devices.
- Depending on the position chosen for the installation of the unit.
- In summer, the unit will be subject to solar radiation. Assuming the air is at 35°, the coil (copper and aluminum and therefore excellent conductor) will be very hot. When you switch the unit on, even with the fans stopped, the evaporation will be very high, thereby leading to the definite intervention of the high pressure switch.
- Air recirculation can generate an environmental micro with a temperature less than 4/5°, leading the unit to work out of the limits.
- The clearances are very important, the upstream or downstream obstruction of the fan creates pressure drops that reduce the air flow. This reduction can generate a reduction in the operating temperatures. This decrease may lead the unit out of the operating limits.
- Air in the circuit. Air in the system, even if thoroughly vented, creates a loss of heat transfer coefficient with the consequent possibility of the high pressure safety devices intervening.

CAREFUL SELECTION OF THE DOMESTIC WATER TANK

When you want to use a heat pump for water production the unit must always be connected to an adequately selected tank that is dedicated to the production of domestic hot water. In fact, the heat pumps cannot produce the water instantly and the plate exchanger must also work with a closed water circuit to prevent scale from forming on the inside.

The choice of the tank for the domestic water must be done very carefully because if it is not adequately sized, the system

may not be reliable. For this reason, it is strongly recommended to choose a tank that allows the heat pump to work on the technical water and not on a coil. The combination of the heat pumps with coils is in fact problematic because of the difficulty in sizing the coil surface that must always be done in the worst conditions, that is in summer conditions. Units can only be combined with coil tanks for storage provided directly by BlueBox.

POSITIONING THE DOMESTIC WATER OPERATING PROBE CORRECTLY

For the domestic hot water and HWS control, the units use a supplied temperature probe, which must be installed properly: the tank must have a well in the upper part, which is long enough to almost reach the centre of the tank. The probe supplied with the unit must be inserted in the well with conductive paste in order to ensure an accurate reading of the water temperature. An incorrect temperature reading, caused by an unsuitable positioning or little conductive paste, could lead to the safety devices being triggered or the unit blocking.

SELECTING THE 3-WAY DOMESTIC WATER VALVE CORRECTLY

If you use the automatic control function of the domestic hot water, a 3-way valve with power supply 230/1~/50 is required together with a diameter of 1/4 of an inch greater than the diameter of the unit pipe. This valve must guarantee adequate speed switching and it is mandatory for the flow to never be cancelled during switching, thereby always allowing a flow.

POSITIONING THE COLD WATER TOP-UP CORRECTLY

Depending on the type of tank used for the production of domestic hot water, there may be a connection for the water top-up from the mains (cold). It is very important for this connection to not be too close to the return pipe to the heat pump. In fact this could cause the cold water inlet from the mains cool the return water to the heat pump and this sudden drop in temperature of the inlet water to the "hot" exchanger may lead to the safety devices intervening.

Even in this case using an instantaneous producer for the domestic water combined with a tank that allows the heat pump to work on the technical water allows this problem to be avoided.

CONSIDERING THE MOISTURE CONTENT IN THE WALLS AND SLABS IN THE BUILDING

Large amounts of water are used to construct masonry works and screeds, to which one can add the rain absorbed by the unfinished works. All the moisture absorbed by the building evaporates very slowly.

Due to the high moisture content present in the entire building, in the first two periods of heating the heating requirements of the building will be increased.

If the heat pump is adequately sized to overcome the nominal heat load of the building and the first system start-up is in cold weather, the heating capacity output may be insufficient to start-up the entire system at once. In this case it is advisable to carry out its start-up per area, namely adding a few sections of the system at a time just as those already connected start to heat up or with the use of an additional electrical heater to compensate for the increased heating requirements.

ALWAYS GUARANTEEING THE MINIMUM WATER CONTENT

If the unit is connected to a hydraulic system split into areas, such as those with radiant panels, with them being controlled via solenoid valves on the manifold (heads), it is mandatory to ensure the presence of at least five litres of water for every kW of heat output of the unit in the most unfavorable condition, that is with a single open area. This is necessary to prevent the condition whereby almost all the heads are closed and the heat pump has to work with an extremely small volume of water. In this case, during the defrosting cycle, the safety devices may intervene due to excessively cold water.

STARTING-UP THE UNIT WITH WATER THAT IS TOO HOT OR TOO COLD

The safety devices may intervene if the unit is started-up in winter with a very cold water temperature and out of the operating limits of the unit. The system is brought up to its nominal speed by simply reducing the thermal load by sectioning part of the system. When the water temperature of the partial system will be within the operating range, the part of the system that was previously sectioned can then be connected.

GEYSER 2 MT TECHNICAL DATA

Unit size			8	10	12	16	18	20	23	25	29	34	38	42
Heating (Gross values)														
Nominal heating capacity (A7;W35)	(1)	kW	6,9	8,9	11,1	14,9	16,6	19,2	22,1	24,0	27,6	32,3	36,8	40,4
Heating absorbed power	(1), (2)	kW	1,7	2,1	2,5	3,5	3,9	4,3	5,0	5,5	6,6	7,5	8,2	9,4
COP	(1)		4,09	4,14	4,40	4,29	4,25	4,48	4,39	4,38	4,19	4,32	4,50	4,30
Efficiency Class			A	A	A	A	A	A	A	A	A	A	A	A
Nominal heating capacity (A7;W45)	(3)	kW	6,8	8,8	10,9	14,6	16,2	18,7	21,5	23,4	26,9	31,5	35,7	39,2
Heating absorbed power	(3), (2)	kW	2,1	2,7	3,1	4,4	4,8	5,3	6,2	6,8	8,0	9,2	10,0	11,4
COP	(3)		3,23	3,22	3,46	3,37	3,40	3,54	3,47	3,45	3,37	3,42	3,55	3,43
Efficiency Class			A	A	A	A	A	A	A	A	A	A	A	A
Heating (EN14511 values)														
Nominal heating capacity (A7;W35)	(1), (9)	kW	6,9	8,9	11,2	15,0	16,7	19,4	22,2	24,2	27,8	32,5	37,1	40,6
COP	(1), (9)		4,06	4,12	4,36	4,16	4,16	4,37	4,29	4,28	4,10	4,23	4,40	4,23
Efficiency Class			A	A	A	A	A	A	A	A	A	A	A	A
Nominal heating capacity (A7;W45)	(3), (9)	kW	6,9	8,8	10,9	14,8	16,3	18,9	21,7	23,5	27,1	31,7	35,9	39,4
COP	(3), (9)		3,21	3,20	3,43	3,29	3,34	3,47	3,41	3,39	3,32	3,37	3,49	3,38
Efficiency Class			A	A	A	A	A	A	A	A	A	A	A	A
Cooling (Gross values)														
Nominal cooling capacity (A35;W18)	(5)	kW	8,5	10,2	13,0	17,9	19,5	22,6	26,0	28,3	32,9	39,9	43,5	45,1
Cooling absorbed power	(5), (2)	kW	2,2	2,6	3,1	4,3	4,6	5,4	6,4	6,9	8,3	9,3	10,9	11,5
EER	(5)		3,84	3,88	4,19	4,14	4,28	4,23	4,05	4,12	3,98	4,29	4,00	3,93
Efficiency Class			A	A	A	A	A	A	A	A	A	A	A	A
Nominal cooling capacity (A35;W7)	(6)	kW	6,2	7,6	9,7	13,4	14,2	16,8	19,1	20,8	24,4	29,6	32,4	38,6
Cooling absorbed power	(6),(2)	kW	2,1	2,5	2,9	4,0	4,4	4,9	5,9	6,4	7,6	8,7	10,1	11,0
EER	(6)		2,90	3,02	3,38	3,31	3,23	3,40	3,24	3,27	3,21	3,42	3,20	3,51
Efficiency Class			B	B	A	A	A	A	A	A	A	A	A	A
Cooling (EN14511 values)														
Nominal cooling capacity (A35;W18)	(5), (9)	kW	8,5	10,2	13,0	17,8	19,4	22,5	25,9	28,1	32,7	39,7	43,2	44,9
EER	(5), (9)		3,80	3,84	4,14	3,98	4,15	4,09	3,92	4,01	3,88	4,18	3,90	3,84
Efficiency Class			A	A	A	A	A	A	A	A	A	A	A	A
Nominal cooling capacity (A35;W7)	(6), (9)	kW	6,2	7,5	9,6	13,2	14,1	16,6	18,9	20,7	24,2	29,4	32,2	38,4
EER	(6), (9)		2,87	2,99	3,33	3,16	3,12	3,28	3,13	3,17	3,11	3,32	3,11	3,42
Efficiency Class			C	B	A	A	A	A	A	A	A	A	A	A
Compressor														
Type			Scroll											
Quantity/Cooling circuits		n°/n°	1 / 1	1 / 1	1 / 1	1 / 1	1 / 1	1 / 1	1 / 1	1 / 1	1 / 1	1 / 1	1 / 1	1 / 1
Capacity control		n°	1	1	1	1	1	1	1	1	1	1	1	1
Total oil load		kg	1,1	1,3	1,3	1,2	1,7	1,9	1,8	2,5	3,3	3,3	3,3	3,3
Total refrigerant load		kg	2,6	3,5	4,2	5,7	6,2	7,0	8,4	9,1	10,7	12,4	13,5	14,2
Fans														
Type			Axial											
Quantity		n°	1	1	1	2	2	2	2	2	2	2	2	2
Air flow rate		m3/h	3.900	3.900	3.600	7.800	7.800	7.200	14.000	14.000	18.000	18.000	17.000	17.000
User side exchanger														
Type			Plates											
Water flow rate	(1)	l/h	1.190	1.525	1.916	2.554	2.860	3.304	3.792	4.131	4.752	5.561	6.334	6.939
Pressure drop	(1)	kPa	4	4	6	42	28	33	34	30	33	33	34	30
Hydraulic module (1P, 1PS)														
Pump model			P1	P1	P1	P2	P2	P2	P3	P3	P3	P3	P4	P4
Useful pump head		kPa	71	68	65	91	89	85	167	160	145	124	101	193
Storage tank capacity		l	70	70	70	70	70	70	130	130	130	130	130	130
Expansion tank		l	2	2	2	2	2	2	5	5	5	5	5	5
Noise														
Sound power level	(7)	dB(A)	63	65	66	68	70	70	72	73	74	75	75	75
Noise pressure level	(8)	dB(A)	32	34	35	37	39	39	41	42	42	43	43	43
Dimensions and weight														
Length		mm	925	925	925	925	925	925	1.105	1.105	1.305	1.305	1.305	1.305
Depth		mm	600	600	600	600	600	600	721	721	737	737	737	737
Height		mm	700	700	700	1.350	1.350	1.350	1.385	1.385	1.585	1.585	1.585	1.585
Operating weight		kg	88	93	102	135	151	166	212	233	358	367	387	398

(1) External air temperature 7°C DB, 6°C WB; condenser input-output temperature 30-35°C
(2) The total power is given by the sum of the power absorbed by the compressors and by the fans
(3) External air temperature 7°C DB, 6°C WB; condenser input-output temperature 40-45°C
(4) External air temperature 7°C DB, 6°C WB; condenser input-output temperature 60-65°C
(5) External air temperature 35°C; input water-evaporator output temperature 23-18°C
(6) External air temperature 35°C; input water-evaporator output temperature 12-7°C
(7) Sound power levels calculated compliant to ISO 3744
(8) Sound pressure levels refer to 10 meters from unit in free field and directionality factor Q=2
(9) Values compliant with EN 14511
This board reports the feature data of the base and standard versions; for details, refer to the specific documentation.

GEYSER 2 MT TECHNICAL DATA

Unit size			52	62	72	82	92
Heating (Gross values)							
Nominal heating capacity (A7;W35)	(1)	kW	45,6	53,4	60,6	70,6	77,0
Heating absorbed power	(1), (2)	kW	10,9	12,1	13,9	16,3	17,9
COP	(1)		4,18	4,40	4,37	4,34	4,30
Efficiency Class			A	A	A	A	A
Nominal heating capacity (A7;W45)	(3)	kW	44,3	52,0	59,1	68,3	75,1
Heating absorbed power	(3), (2)	kW	13,1	14,9	17,2	20,0	21,8
COP	(3)		3,38	3,50	3,43	3,41	3,44
Efficiency Class			A	A	A	A	A
Heating (EN14511 values)							
Nominal heating capacity (A7;W35)	(1), (9)	kW	45,9	53,7	60,9	71,0	77,4
COP	(1), (9)		4,11	4,32	4,30	4,26	4,23
Efficiency Class			A	A	A	A	A
Nominal heating capacity (A7;W45)	(3), (9)	kW	44,6	52,3	59,4	68,6	75,5
COP	(3), (9)		3,34	3,45	3,39	3,37	3,39
Efficiency Class			A	A	A	A	A
Cooling (Gross values)							
Nominal cooling capacity (A35;W18)	(5)	kW	54,3	64,5	73,6	83,6	91,4
Cooling absorbed power	(5), (2)	kW	14,8	16,5	20,0	22,0	25,3
EER	(5)		3,67	3,90	3,68	3,79	3,62
Efficiency Class			B	A	B	B	C
Nominal cooling capacity (A35;W7)	(6)	kW	40,5	48,2	55,0	62,5	68,8
Cooling absorbed power	(6),(2)	kW	13,6	15,1	18,4	20,5	23,2
EER	(6)		2,97	3,18	2,99	3,06	2,97
Efficiency Class			B	A	B	B	B
Cooling (EN14511 values)							
Nominal cooling capacity (A35;W18)	(5), (9)	kW	54,0	64,2	73,2	83,2	91,1
EER	(5), (9)		3,59	3,81	3,61	3,72	3,55
Efficiency Class			C	A	C	B	C
Nominal cooling capacity (A35;W7)	(6), (9)	kW	40,2	47,9	54,7	62,2	68,4
EER	(6), (9)		2,90	3,10	2,93	2,99	2,91
Efficiency Class			C	A	B	B	B
Compressor							
Type					Scroll		
Quantity/Cooling circuits		n° / n°	2/1	2/1	2/1	2/1	2/1
Capacity control		n°	2	2	2	2	2
Total oil load		kg	3,6	6,8	6,8	6,8	6,8
Total refrigerant load		kg	15,2	17,8	20,2	23,5	25,7
Fans							
Type					Axial		
Quantity		n°	1	1	1	1	1
Air flow rate		m3/h	18.000	17.000	17.000	20.000	20.000
User side exchanger							
Type					Plates		
Water flow rate	(1)	l/h	7.844	9.176	10.416	12.146	13.248
Pressure drop	(1)	kPa	33	35	33	35	36
Hydraulic module							
Pump model			P5	P5	P5	P5	P5
Useful pump head		kPa	162	156	154	145	138
Noise							
Sound power level	(7)	dB(A)	73	73	74	75	77
Noise pressure level	(8)	dB(A)	42	42	43	44	46
Dimensions and weight							
Length		mm	1.403	1.403	1.403	1.403	1.403
Depth		mm	1.203	1.203	1.203	1.203	1.203
Height		mm	2.390	2.390	2.390	2.390	2.390
Operating weight		kg	575	592	602	620	631

(1) External air temperature 7°C DB, 6°C WB; condenser input-output temperature 30-35°C
(2) The total power is given by the sum of the power absorbed by the compressors and by the fans
(3) External air temperature 7°C DB, 6°C WB; condenser input-output temperature 40-45°C
(4) External air temperature 7°C DB, 6°C WB; condenser input-output temperature 60-65°C
(5) External air temperature 35°C; input water-evaporator output temperature 23-18°C
(6) External air temperature 35°C; input water-evaporator output temperature 12-7°C
(7) Sound power levels calculated compliant to ISO 3744
(8) Sound pressure levels refer to 10 meters from unit in free field and directionality factor Q=2
(9) Values compliant with EN 14511
This board reports the feature data of the base and standard versions; for details, refer to the specific documentation.

GEYSER 2 HT TECHNICAL DATA

Unit size			7	9	11	13	17	22	26	32	36	41
Heating (Gross values)												
Nominal heating capacity (A7;W35)	(1)	kW	6,8	8,4	10,8	13,0	16,0	21,0	25,0	29,7	34,3	37,4
Heating absorbed power	(1), (2)	kW	1,6	2,0	2,5	3,0	3,7	4,9	5,8	7,1	8,1	8,9
COP	(1)		4,19	4,33	4,32	4,30	4,30	4,28	4,29	4,21	4,24	4,19
Efficiency Class			A	A	A	A	A	A	A	A	A	A
Nominal heating capacity (A7;W45)	(3)	kW	6,6	8,3	10,5	13,2	16,3	21,2	25,3	30,7	33,1	38,0
Heating absorbed power	(3), (2)	kW	1,9	2,4	3,1	3,8	4,6	6,1	7,3	8,8	10,1	11,0
COP	(3)		3,38	3,45	3,39	3,52	3,51	3,46	3,46	3,49	3,28	3,46
Efficiency Class			A	A	A	A	A	A	A	A	A	A
Heating (EN14511 values)												
Nominal heating capacity (A7;W35)	(1), (9)	kW	6,8	8,5	10,8	13,1	16,1	21,1	25,2	29,9	34,5	37,6
COP	(1), (9)		4,15	4,30	4,28	4,19	4,20	4,18	4,19	4,13	4,16	4,13
Efficiency Class			A	A	A	A	A	A	A	A	A	A
Nominal heating capacity (A7;W45)	(3), (9)	kW	6,6	8,3	10,5	13,3	16,4	21,4	25,5	30,8	33,3	38,2
COP	(3), (9)		3,38	3,45	3,39	3,52	3,51	3,46	3,46	3,49	3,28	3,46
Efficiency Class			A	A	A	A	A	A	A	A	A	A
Cooling (Gross values)												
Nominal cooling capacity (A35;W18)	(5)	kW	8,3	10,4	13,3	15,4	18,6	25,2	29,9	38,1	41,9	48,4
Cooling absorbed power	(5), (2)	kW	2,0	2,6	3,4	3,8	4,6	6,3	7,4	9,7	10,4	12,3
EER	(5)		4,24	4,07	3,88	4,10	4,03	4,02	4,05	3,91	4,05	3,95
Efficiency Class			A	A	A	A	A	A	A	A	A	A
Nominal cooling capacity (A35;W7)	(6)	kW	6,1	7,7	10,1	12,1	14,5	19,8	23,1	29,9	34,0	37,8
Cooling absorbed power	(6),(2)	kW	1,9	2,4	3,2	3,7	4,5	6,1	7,0	9,2	10,1	11,5
EER	(6)		3,24	3,18	3,15	3,29	3,24	3,25	3,33	3,26	3,38	3,27
Efficiency Class			A	A	A	A	A	A	A	A	A	A
Cooling (EN14511 values)												
Nominal cooling capacity (A35;W18)	(5), (9)	kW	8,2	10,4	13,3	15,3	18,5	25,1	29,7	37,9	41,7	48,2
EER	(5), (9)		4,19	4,03	3,84	3,96	3,91	3,89	3,93	3,82	3,95	3,88
Efficiency Class			A	A	A	A	A	A	A	A	A	A
Nominal cooling capacity (A35;W7)	(6), (9)	kW	6,0	7,7	10,0	12,0	14,4	19,6	22,9	29,8	33,8	37,6
EER	(6), (9)		3,20	3,15	3,11	3,17	3,14	3,14	3,22	3,18	3,29	3,20
Efficiency Class			A	A	A	A	A	A	A	A	A	A
Compressor												
Type			Scroll									
Quantity/Cooling circuits		n° / n°	1 / 1	1 / 1	1 / 1	1 / 1	1 / 1	1 / 1	1 / 1	1 / 1	1 / 1	1 / 1
Capacity control		n°	1	1	1	1	1	1	1	1	1	1
Total oil load		kg	0,7	1,2	1,2	1,2	1,2	1,9	3,4	3,4	3,4	3,4
Total refrigerant load		kg	2,6	3,5	4,2	6,2	7,0	8,4	9,1	10,7	12,4	13,5
Fans												
Type			Axial									
Quantity		n°	1	1	1	1	1	2	2	2	2	2
Air flow rate		m3/h	3.800	3.800	3.500	7.600	7.600	13.000	13.000	16.000	16.000	16.000
User side exchanger												
Type			Plates									
Water flow rate	(1)	l/h	1.166	1.451	1.856	2.239	2.750	3.603	4.298	5.109	5.895	6.439
Pressure drop	(1)	kPa	4	4	6	31	28	35	36	30	31	26
Hydraulic module												
Pump model			P1	P1	P1	P2	P2	P3	P3	P3	P4	P4
Useful pump head		kPa	67	65	59	63	62	137	120	106	178	175
Storage tank capacity		l	70	70	70	70	70	130	130	130	130	130
Expansion tank		l	2	2	2	2	2	5	5	5	5	5
Noise												
Sound power level	(7)	dB(A)	63	63	64	66	67	70	70	75	75	75
Noise pressure level	(8)	dB(A)	32	32	33	35	36	39	39	44	44	44
Dimensions and weight												
Length		mm	1.105	1.105	1.105	1.105	1.105	1.105	1.105	1.305	1.305	1.305
Depth		mm	737	737	737	737	737	721	721	737	737	737
Height		mm	982	982	982	982	982	1.385	1.385	1.585	1.585	1.585
Operating weight		kg	108	112	118	124	133	232	251	385	405	416

(1) External air temperature 7°C DB, 6°C WB; condenser input-output temperature 30-35°C
(2) The total power is given by the sum of the power absorbed by the compressors and by the fans
(3) External air temperature 7°C DB, 6°C WB; condenser input-output temperature 40-45°C
(4) External air temperature 7°C DB, 6°C WB; condenser input-output temperature 60-65°C
(5) External air temperature 35°C; input water-evaporator output temperature 23-18°C
(6) External air temperature 35°C; input water-evaporator output temperature 12-7°C
(7) Sound power levels calculated compliant to ISO 3744
(8) Sound pressure levels refer to 10 meters from unit in free field and directionality factor Q=2
(9) Values compliant with EN 14511
This board reports the feature data of the base and standard versions; for details, refer to the specific documentation.

GEYSER 2 HT TECHNICAL DATA

Unit size			50	60	70	80	90
Heating (Gross values)							
Nominal heating capacity (A7;W35)	(1)	kW	41,8	50,3	55,9	69,3	76,2
Heating absorbed power	(1), (2)	kW	9,7	11,5	13,3	16,1	17,8
COP	(1)		4,31	4,38	4,20	4,30	4,27
Efficiency Class			A	A	A	A	A
Nominal heating capacity (A7;W45)	(3)	kW	42,4	51,1	57,7	70,7	77,5
Heating absorbed power	(3), (2)	kW	12,2	14,4	16,8	20,0	22,0
COP	(3)		3,48	3,54	3,43	3,53	3,52
Efficiency Class			A	A	A	A	A
Heating (EN14511 values)							
Nominal heating capacity (A7;W35)	(1), (9)	kW	42,0	50,5	56,2	69,7	76,5
COP	(1), (9)		4,23	4,30	4,14	4,23	4,20
Efficiency Class			A	A	A	A	A
Nominal heating capacity (A7;W45)	(3), (9)	kW	42,6	51,4	57,9	71,0	77,9
COP	(3), (9)		3,48	3,54	3,43	3,53	3,52
Efficiency Class			A	A	A	A	A
Cooling (Gross values)							
Nominal cooling capacity (A35;W18)	(5)	kW	49,7	57,9	71,9	80,9	93,1
Cooling absorbed power	(5), (2)	kW	13,1	15,4	19,2	21,2	25,1
EER	(5)		3,80	3,77	3,74	3,81	3,70
Efficiency Class			A	B	B	A	B
Nominal cooling capacity (A35;W7)	(6)	kW	39,2	44,9	55,7	63,9	72,9
Cooling absorbed power	(6),(2)	kW	12,5	14,5	18,0	20,5	23,5
EER	(6)		3,13	3,09	3,10	3,12	3,10
Efficiency Class			A	B	B	A	A
Cooling (EN14511 values)							
Nominal cooling capacity (A35;W18)	(5), (9)	kW	49,5	57,7	71,6	80,5	92,8
EER	(5), (9)		3,72	3,69	3,68	3,74	3,64
Efficiency Class			B	B	B	B	C
Nominal cooling capacity (A35;W7)	(6), (9)	kW	39,0	44,6	55,4	63,6	72,5
EER	(6), (9)		3,06	3,01	3,04	3,06	3,04
Efficiency Class			B	B	B	B	B
Compressor							
Type					Scroll		
Quantity/Cooling circuits		n° / n°	2/1	2/1	2/1	2/1	2/1
Capacity control		n°	2	2	2	2	2
Total oil load		kg	3,8	6,8	6,8	6,8	6,8
Total refrigerant load		kg	14,0	18,0	19,0	23,0	25,0
Fans							
Type					Axial		
Quantity		n°	1	1	1	1	1
Air flow rate		m3/h	18.000	17.000	17.000	20.000	20.000
User side exchanger							
Type					Plates		
Water flow rate	(1)	l/h	7.192	8.647	9.620	11.924	13.097
Pressure drop	(1)	kPa	30	32	29	34	34
Hydraulic module							
Pump model			P5	P5	P5	P5	P5
Useful pump head		kPa	167	161	160	146	141
Noise							
Sound power level	(7)	dB(A)	73	73	74	75	77
Noise pressure level	(8)	dB(A)	42	42	43	44	46
Dimensions and weight							
Length		mm	1.403	1.403	1.403	1.403	1.403
Depth		mm	1.203	1.203	1.203	1.203	1.203
Height		mm	2.390	2.390	2.390	2.390	2.390
Operating weight		kg	575	592	602	620	631

(1) External air temperature 7°C DB, 6°C WB; condenser input-output temperature 30-35°C
(2) The total power is given by the sum of the power absorbed by the compressors and by the fans
(3) External air temperature 7°C DB, 6°C WB; condenser input-output temperature 40-45°C
(4) External air temperature 7°C DB, 6°C WB; condenser input-output temperature 60-65°C
(5) External air temperature 35°C; input water-evaporator output temperature 23-18°C
(6) External air temperature 35°C; input water-evaporator output temperature 12-7°C
(7) Sound power levels calculated compliant to ISO 3744
(8) Sound pressure levels refer to 10 meters from unit in free field and directionality factor Q=2
(9) Values compliant with EN 14511
This board reports the feature data of the base and standard versions; for details, refer to the specific documentation.

GEYSER 2 MT ELECTRICAL DATA

Unit size			8	10	12	16	18	20	23	25	29	34	38	42
Maximum absorbed power	(1)(3)	kW	3,1	3,9	4,5	6,3	6,4	7,6	8,9	9,6	11,2	12,9	14,2	15,9
			(3,3)	4,1	4,7	6,7	6,8	8,0	9,5	10,2	11,8	13,5	15,1	16,8
Maximum absorbed current	(2)(3)	A	16,9	19,9	8,9	11,8	13,6	16,8	18,6	19,6	26,0	27,0	30,0	36,0
			(17,9)	(20,9)	(9,9)	(13,8)	(15,6)	(18,8)	(21,4)	(22,4)	(28,8)	(29,8)	(32,6)	(38,6)
Maximum current at peak	(4)	A	61,9	82,9	48,9	65,8	65,8	75,8	104,6	98,6	116,0	123,0	123,0	145,0
			(62,9)	(83,9)	(49,9)	(67,8)	(67,8)	(77,8)	(107,4)	(101,4)	(118,8)	(125,8)	(125,6)	(147,6)
Maximum current at peak with soft-starter	(4)	A	37,1	49,7	29,3	39,5	39,5	45,5	62,8	59,2	69,6	73,8	73,8	87,0
			(37,7)	(50,3)	(29,9)	(40,7)	(40,7)	(46,7)	(64,4)	(60,8)	(71,3)	(75,5)	(75,4)	(88,6)
Fan nominal power		n°xkW	1 x 0,2	1 x 0,2	1 x 0,2	2 x 0,2	2 x 0,2	2 x 0,2	2 x 0,3	2 x 0,3	2 x 0,6	2 x 0,6	2 x 0,6	2 x 0,6
Fan nominal current		n°xA	1 x 0,9	1 x 0,9	1 x 0,9	2 x 0,9	2 x 0,9	2 x 0,9	2 x 1,8	2 x 1,8	2 x 2,5	2 x 2,5	2 x 2,5	2 x 2,5
Pump motor nominal power		kW	0,21	0,21	0,21	0,42	0,42	0,42	0,62	0,62	0,62	0,62	0,90	0,90
Pump motor nominal current		A	1,00	1,00	1,00	2,00	2,00	2,00	2,77	2,77	2,77	2,77	2,61	2,61
Electric power supply		V/ph/Hz	230/1~/50	230/1~/50	400/3N~/50	400/3N~/50	400/3N~/50	400/3N~/50	400/3N~/50	400/3N~/50	400/3N~/50	400/3N~/50	400/3N~/50	400/3N~/50
Optional power supply		V/ph/Hz	400/3N~/50	400/3N~/50	230/1~/50	230/1~/50	-	-	-	-	-	-	-	-

GEYSER 2 MT ELECTRICAL DATA

Unit size			52	62	72	82	92
Maximum absorbed power	(1),(3)	kW	18,6	21,9	25,2	28,5	30,8
			20,1	23,3	26,6	29,9	32,2
Maximum absorbed current	(2),(3)	A	35,9	45,5	47,5	53,5	65,5
			(38,6)	(48,2)	(50,2)	(56,2)	(68,2)
Maximum current at peak	(4)	A	120,7	135,5	143,5	146,5	174,5
			(123,4)	(138,2)	(146,2)	(149,2)	(177,2)
Maximum current at peak with soft-starter	(4)	A	72,4	81,3	86,1	87,9	104,7
			(74,0)	(82,9)	(87,7)	(89,5)	(106,3)
Fan nominal power		n° x kW	1 x 1,5	1 x 1,5	1 x 1,5	1 x 1,5	1 x 1,5
Fan nominal current		n° x A	1 x 3,5	1 x 3,5	1 x 3,5	1 x 3,5	1 x 3,5
Pump motor nominal power		kW	1,43	1,43	1,43	1,43	1,43
Pump motor nominal current		A	2,70	2,70	2,70	2,70	2,70
Electric power supply		V/ph/Hz	400/3~/50	400/3~/50	400/3~/50	400/3~/50	400/3~/50
Optional power supply		V/ph/Hz					

(1) Electric power that must be available from the electric network for the unit to work.
(2) Current at which the units' internal protections intervene. It is the maximum current absorbed by the unit. This value must never be exceeded and must be taken into account when sizing the line and the relative protection devices (see the wiring diagram supplied with the units).
(3) The values between brackets refer to the ST version units with the maximum number of pumps available (with or without storage tank).
(4) Maximum peak current calculated considering the compressor start-up with higher power and maximum current absorbed by all other devices.
This board reports the feature data of the base and standard versions; for details, refer to the specific documentation.

GEYSER 2 HT ELECTRICAL DATA

Unit size			7	9	11	13	17	22	26	32	36	41
Maximum absorbed power	(1),(3)	kW	2,9	3,7	4,6	5,8	7,1	9,8	11,7	14,1	16,5	19,3
			(3,1)	(3,9)	(4,8)	(6,2)	(7,5)	(10,5)	(12,3)	(14,7)	(17,4)	(20,2)
Maximum absorbed current	(2),(3)	A	13,7	18,0	8,3	11,7	13,4	19,6	22,2	26,0	31,0	40,4
			(14,7)	(19,0)	(9,3)	(13,7)	(15,4)	(22,4)	(25,0)	(28,8)	(33,6)	(43,0)
Maximum current at peak	(4)	A	60,9	83,9	52,4	54,0	72,5	104,6	131,6	123,0	145,0	179,0
			(61,9)	(84,9)	(53,4)	(56,0)	(74,5)	(107,4)	(134,4)	(125,8)	(147,6)	(181,6)
Maximum current at peak with soft-starter	(4)	A	36,5	50,3	31,4	32,4	43,5	62,8	79,0	73,8	87,0	107,4
			(37,1)	(50,9)	(32,0)	(33,6)	(44,7)	(64,4)	(80,6)	(75,5)	(88,6)	(109,0)
Fan nominal power		n° x kW	1 x 0,2	1 x 0,2	1 x 0,2	1 x 0,6	1 x 0,6	2 x 0,3	2 x 0,3	2 x 0,6	2 x 0,6	2 x 0,6
Fan nominal current		n° x A	1 x 0,9	1 x 0,9	1 x 0,9	1 x 2,5	1 x 2,5	2 x 1,8	2 x 1,8	2 x 2,5	2 x 2,5	2 x 2,5
Pump motor nominal power		kW	0,21	0,21	0,21	0,42	0,42	0,62	0,62	0,62	0,90	0,90
Pump motor nominal current		A	1,00	1,00	1,00	2,00	2,00	2,77	2,77	2,77	2,61	2,61
Electric power supply		V/ph/Hz	230/1~/50	230/1~/50	400/3N~/50	400/3N~/50	400/3N~/50	400/3N~/50	400/3N~/50	400/3N~/50	400/3N~/50	400/3N~/50
Optional power supply		V/ph/Hz	-	-	230/1~/50	-	-	-	-	-	-	-

GEYSER 2 HT ELECTRICAL DATA

Unit size			50	60	70	80	90
Maximum absorbed power	(1),(3)	kW	20,0	23,6	27,5	32,2	37,9
			(21,4)	(25,0)	(28,9)	(33,6)	(39,3)
Maximum absorbed current	(2),(3)	A	35,5	40,7	45,5	55,5	74,3
			(38,2)	(43,4)	(48,2)	(58,2)	(77,0)
Maximum current at peak	(4)	A	120,5	150,1	142,5	169,5	212,9
			(123,2)	(152,8)	(145,2)	(172,2)	(215,6)
Maximum current at peak with soft-starter	(4)	A	72,3	90,1	85,5	101,7	127,7
			(73,9)	(91,7)	(87,1)	(103,3)	(129,4)
Fan nominal power		n° x kW	1 x 1,5	1 x 1,5	1 x 1,5	1 x 1,5	1 x 1,5
Fan nominal current		n° x A	1 x 3,5	1 x 3,5	1 x 3,5	1 x 3,5	1 x 3,5
Pump motor nominal power		kW	1,43	1,43	1,43	1,43	1,43
Pump motor nominal current		A	2,70	2,70	2,70	2,70	2,70
Electric power supply		V/ph/Hz	400/3~/50	400/3~/50	400/3~/50	400/3~/50	400/3~/50
Optional power supply		V/ph/Hz					

(1) Electric power that must be available from the electric network for the unit to work.
(2) Current at which the units' internal protections intervene. It is the maximum current absorbed by the unit. This value must never be exceeded and must be taken into account when sizing the line and the relative protection devices (see the wiring diagram supplied with the units).
(3) The values between brackets refer to the ST version units with the maximum number of pumps available (with or without storage tank).
(4) Maximum peak current calculated considering the compressor start-up with higher power and maximum current absorbed by all other devices.
This board reports the feature data of the base and standard versions; for details, refer to the specific documentation.

OPERATING LIMITS - GEYSER 2 MT

COOLING

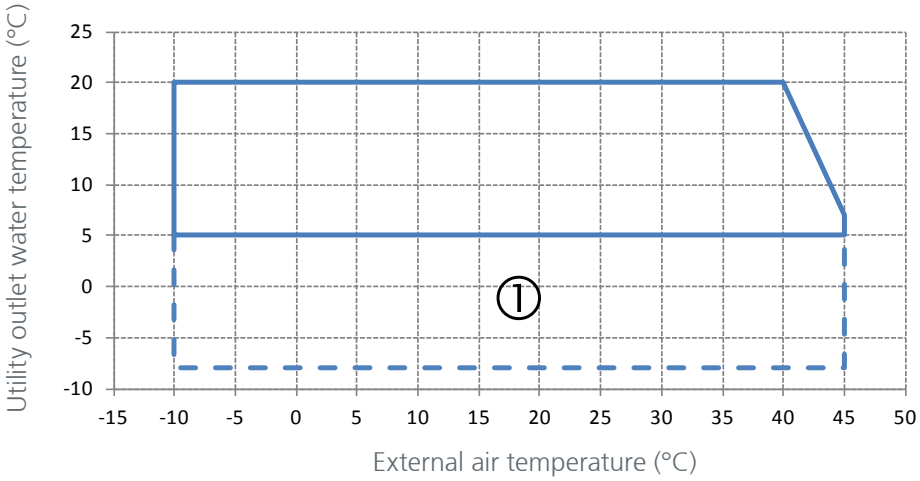

HEATING

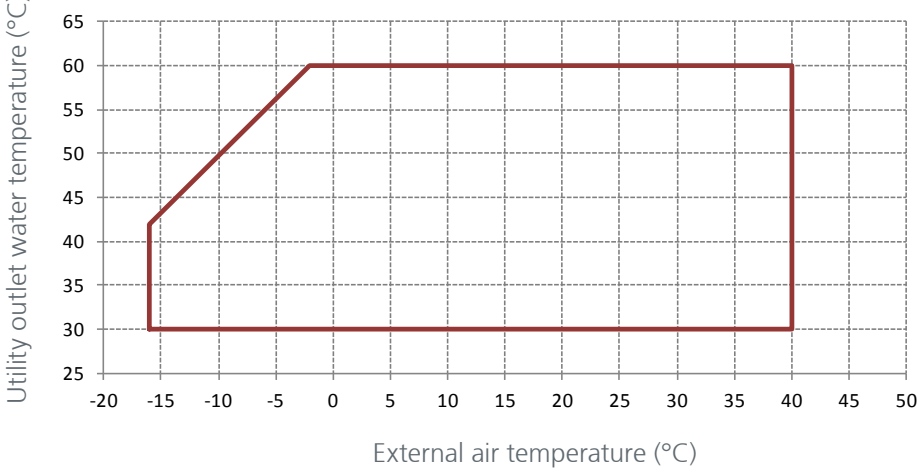

RECOVERY

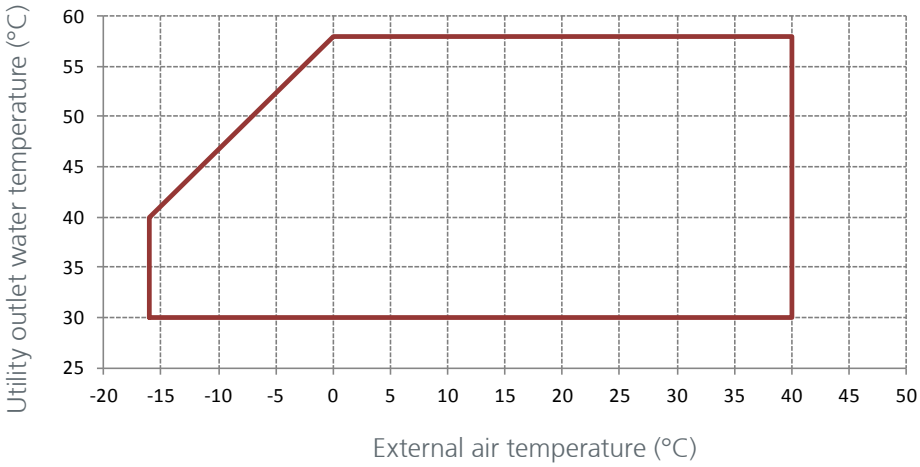

Notes:
The thermal gradient to the utility side exchanger must be between 3°C and 6°C
① : the unit can only operate in this area with evaporator side glycol water

OPERATING LIMITS - GEYSER 2 HT

COOLING

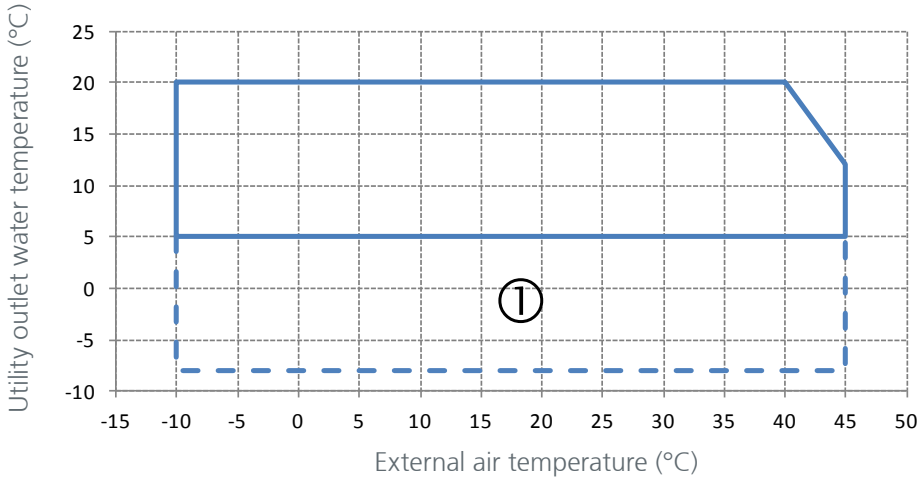

HEATING

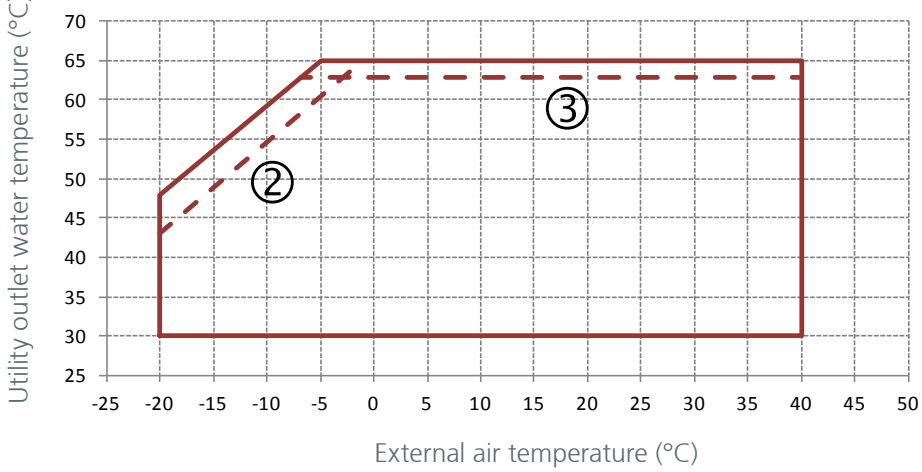

RECOVERY

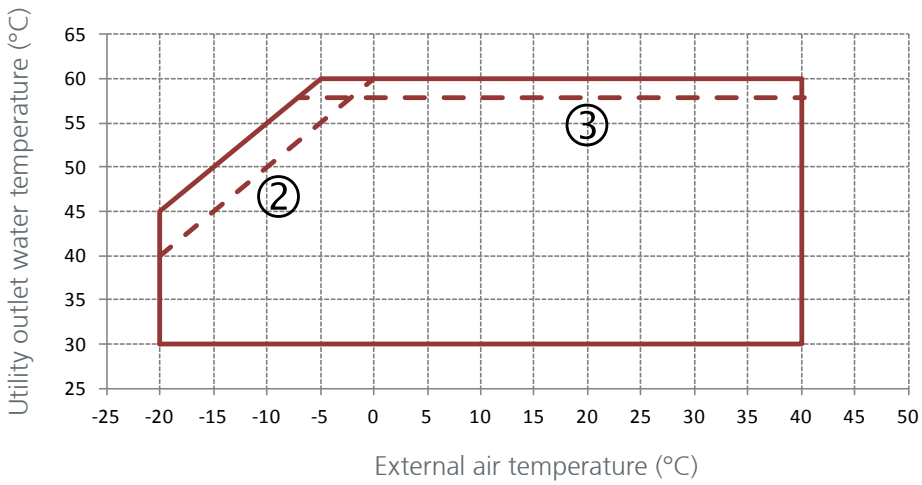

Notes:
The thermal gradient to the utility side exchanger must be between 3°C and 6°C
① : the unit can only operate in this area with evaporator side glycol water
② : limit for models 7, 9 and 11
③ : limit for models from 50 to 90

SOUND LEVELS - GEYSER 2 MT

MODEL	Octave bands [dB]																Total [dB(A)]	
	63 Hz		125 Hz		250 Hz		500 Hz		1000 Hz		2000 Hz		4000 Hz		8000 Hz			
	Lw	Lp	Lw	Lp	Lw	Lp	Lw	Lp	Lw	Lp	Lw	Lp	Lw	Lp	Lw	Lp	Lw	Lp
8	67	36	67	36	66	35	62	31	56	25	52	21	45	14	38	7	63	32
10	68	37	68	37	67	36	64	33	57	26	54	23	48	17	40	9	65	34
12	72	41	69	38	70	39	64	33	60	29	56	25	49	18	42	11	66	35
16	72	41	72	41	70	39	67	36	62	31	56	25	51	20	41	10	68	37
18	74	43	73	42	73	42	68	37	62	31	58	27	53	22	43	12	70	39
20	75	44	74	43	74	43	68	37	63	32	59	28	52	21	45	14	70	39
23	77	46	75	44	76	45	70	39	66	35	61	30	53	22	47	16	72	41
25	78	47	76	45	76	45	72	41	64	33	61	30	56	25	47	16	73	42
29	79	47	77	45	78	46	72	40	67	35	63	31	56	24	49	17	74	42
34	80	48	79	47	77	45	74	42	67	35	63	31	57	25	50	18	75	43
38	81	48	79	47	78	46	75	43	67	35	63	31	57	25	50	18	75	43
42	81	49	79	47	77	45	74	42	68	36	64	32	58	26	51	19	75	43

SOUND LEVELS - GEYSER 2 MT

MODEL	Octave bands [dB]																Total [dB(A)]	
	63 Hz		125 Hz		250 Hz		500 Hz		1000 Hz		2000 Hz		4000 Hz		8000 Hz			
	Lw	Lp	Lw	Lp	Lw	Lp	Lw	Lp	Lw	Lp	Lw	Lp	Lw	Lp	Lw	Lp	Lw	Lp
52	66	35	65	34	68	37	69	38	68	37	66	35	63	32	58	27	73	42
62	66	35	65	34	68	37	69	38	68	37	66	35	63	32	58	27	73	42
72	67	36	67	36	69	38	70	39	69	38	67	36	64	33	59	28	74	43
82	68	37	67	36	70	39	71	40	70	39	68	37	65	34	50	19	75	44
92	71	40	70	39	73	42	73	42	72	41	71	40	67	36	62	31	77	46

Lw: sound power values in free field calculated in compliance with ISO 3744.
Lp: sound pressure levels detected at 10 m from the fan side unit, not channelled in free field, in compliance with ISO 3744.
Data detected with the unit that works at following conditions: A 35°C; W12/7°C

SOUND LEVELS - GEYSER 2 HT

MODEL	Octave bands [dB]																Total [dB(A)]	
	63 Hz		125 Hz		250 Hz		500 Hz		1000 Hz		2000 Hz		4000 Hz		8000 Hz			
	Lw	Lp	Lw	Lp	Lw	Lp	Lw	Lp	Lw	Lp	Lw	Lp	Lw	Lp	Lw	Lp	Lw	Lp
7	67	36	67	36	66	35	62	31	56	25	52	21	45	14	38	7	63	32
9	67	36	67	36	66	35	62	31	56	25	52	21	45	14	38	7	63	32
11	68	37	67	36	67	36	62	31	56	25	53	22	46	15	39	8	64	33
13	72	41	69	38	70	39	64	33	60	29	56	25	49	18	42	11	66	35
17	72	41	69	38	70	39	65	34	60	29	56	25	50	19	43	12	67	36
22	74	43	73	42	73	42	68	37	62	31	58	27	53	22	43	12	70	39
26	75	44	74	43	74	43	68	37	63	32	59	28	52	21	45	14	70	39
32	80	49	79	48	77	46	74	43	67	36	63	32	57	26	50	19	75	44
36	81	50	79	48	78	47	75	44	67	36	63	32	57	26	50	19	75	44
41	81	50	79	48	77	46	74	43	68	37	64	33	58	27	51	20	75	44

SOUND LEVELS - GEYSER 2 HT

MODEL	Octave bands [dB]																Total [dB(A)]	
	63 Hz		125 Hz		250 Hz		500 Hz		1000 Hz		2000 Hz		4000 Hz		8000 Hz			
	Lw	Lp	Lw	Lp	Lw	Lp	Lw	Lp	Lw	Lp	Lw	Lp	Lw	Lp	Lw	Lp	Lw	Lp
50	66	35	65	34	68	37	69	38	68	37	66	35	63	32	58	27	73	42
60	66	35	65	34	68	37	69	38	68	37	66	35	63	32	58	27	73	42
70	67	36	67	36	69	38	70	39	69	38	67	36	64	33	59	28	74	43
80	68	37	67	36	70	39	71	40	70	39	68	37	65	34	50	19	75	44
90	71	40	70	39	73	42	73	42	72	41	71	40	67	36	62	31	77	46

Lw: sound power values in free field calculated in compliance with ISO 3744.
Lp: sound pressure levels detected at 10 m from the fan side unit, not channelled in free field, in compliance with ISO 3744.
Data detected with the unit that works at following conditions: A 35°C; W12/7°C

SOUND LEVELS - GEYSER 2 MT /LN

MODEL	Octave bands [dB]																Total [dB(A)]	
	63 Hz		125 Hz		250 Hz		500 Hz		1000 Hz		2000 Hz		4000 Hz		8000 Hz			
	Lw	Lp	Lw	Lp	Lw	Lp	Lw	Lp	Lw	Lp	Lw	Lp	Lw	Lp	Lw	Lp	Lw	Lp
8	66	35	65	34	65	34	60	29	55	24	50	19	44	13	37	6	62	31
10	67	36	67	36	66	35	63	32	55	24	53	22	47	16	39	8	63	32
12	70	39	68	37	68	37	63	32	58	27	55	24	48	17	41	10	65	34
16	70	39	71	40	69	38	66	35	60	29	55	24	49	18	40	9	67	36
18	72	41	71	40	71	40	67	36	61	30	57	26	51	20	42	11	68	37
20	73	42	72	41	72	41	67	36	62	31	58	27	51	20	44	13	69	38
23	75	44	74	43	74	43	68	37	64	33	60	29	52	21	46	15	71	40
25	76	45	74	43	74	43	71	40	62	31	60	29	55	24	46	15	71	40
29	77	46	75	44	76	45	71	40	65	34	62	31	55	24	48	17	72	41
34	78	47	77	46	75	44	72	41	66	35	61	30	56	25	49	18	73	42
38	79	48	77	46	76	45	74	43	66	35	61	30	56	25	49	18	74	42
42	79	48	77	46	75	44	72	41	67	36	63	32	57	26	50	19	74	42

SOUND LEVELS - GEYSER 2 MT /LN

MODEL	Octave bands [dB]																Total [dB(A)]	
	63 Hz		125 Hz		250 Hz		500 Hz		1000 Hz		2000 Hz		4000 Hz		8000 Hz			
	Lw	Lp	Lw	Lp	Lw	Lp	Lw	Lp	Lw	Lp	Lw	Lp	Lw	Lp	Lw	Lp	Lw	Lp
52	65	34	64	33	67	36	68	37	67	36	65	34	62	31	57	26	72	41
62	65	34	64	33	67	36	68	37	67	36	65	34	62	31	57	26	72	41
72	66	35	66	35	68	37	69	38	68	37	66	35	63	32	58	27	73	42
82	67	36	66	35	69	38	70	39	69	38	67	36	64	33	49	18	73	42
92	70	39	69	38	72	41	72	41	71	40	70	39	66	35	61	30	76	45

Lw: sound power values in free field calculated in compliance with ISO 3744.
Lp: sound pressure levels detected at 10 m from the fan side unit, not channelled in free field, in compliance with ISO 3744.
Data detected with the unit that works at following conditions: A 35°C; W12/7°C

SOUND LEVELS - GEYSER 2 HT /LN

MODEL	Octave bands [dB]																Total [dB(A)]	
	63 Hz		125 Hz		250 Hz		500 Hz		1000 Hz		2000 Hz		4000 Hz		8000 Hz			
	Lw	Lp	Lw	Lp	Lw	Lp	Lw	Lp	Lw	Lp	Lw	Lp	Lw	Lp	Lw	Lp	Lw	Lp
7	66	35	66	35	65	34	61	30	55	24	51	20	45	14	37	6	62	31
9	66	35	66	35	65	34	61	30	55	24	51	20	45	14	37	6	62	31
11	67	36	66	35	66	35	61	30	55	24	52	21	46	15	39	8	63	32
13	71	40	68	37	69	38	63	32	59	28	55	24	48	17	42	11	65	34
17	71	40	68	37	69	38	64	33	59	28	55	24	50	19	43	12	66	35
22	73	42	72	41	72	41	67	36	61	30	57	26	52	21	43	12	69	38
26	74	43	73	42	73	42	67	36	62	31	58	27	51	20	44	13	69	38
32	79	48	78	47	76	45	73	42	66	35	62	31	56	25	49	18	74	43
36	80	49	78	47	77	46	74	43	66	35	62	31	56	25	49	18	74	43
41	80	49	78	47	76	45	73	42	67	36	63	32	57	26	50	19	74	43

SOUND LEVELS - GEYSER 2 HT /LN

MODEL	Octave bands [dB]																Total [dB(A)]	
	63 Hz		125 Hz		250 Hz		500 Hz		1000 Hz		2000 Hz		4000 Hz		8000 Hz			
	Lw	Lp	Lw	Lp	Lw	Lp	Lw	Lp	Lw	Lp	Lw	Lp	Lw	Lp	Lw	Lp	Lw	Lp
50	65	34	64	33	67	36	68	37	67	36	65	34	62	31	57	26	72	41
60	65	34	64	33	67	36	68	37	67	36	65	34	62	31	57	26	72	41
70	66	35	66	35	68	37	69	38	68	37	66	35	63	32	58	27	73	42
80	67	36	66	35	69	38	70	39	69	38	67	36	64	33	49	18	73	42
90	70	39	69	38	72	41	72	41	71	40	70	39	66	35	61	30	76	45

Lw: sound power values in free field calculated in compliance with ISO 3744.
Lp: sound pressure levels detected at 10 m from the fan side unit, not channelled in free field, in compliance with ISO 3744.
Data detected with the unit that works at following conditions: A 35°C; W12/7°C

GEYSER 2 MT DIMENSIONAL LAYOUTS

GEYSER 2 MT Dimensional layout

SD00315 - A

8-10-12

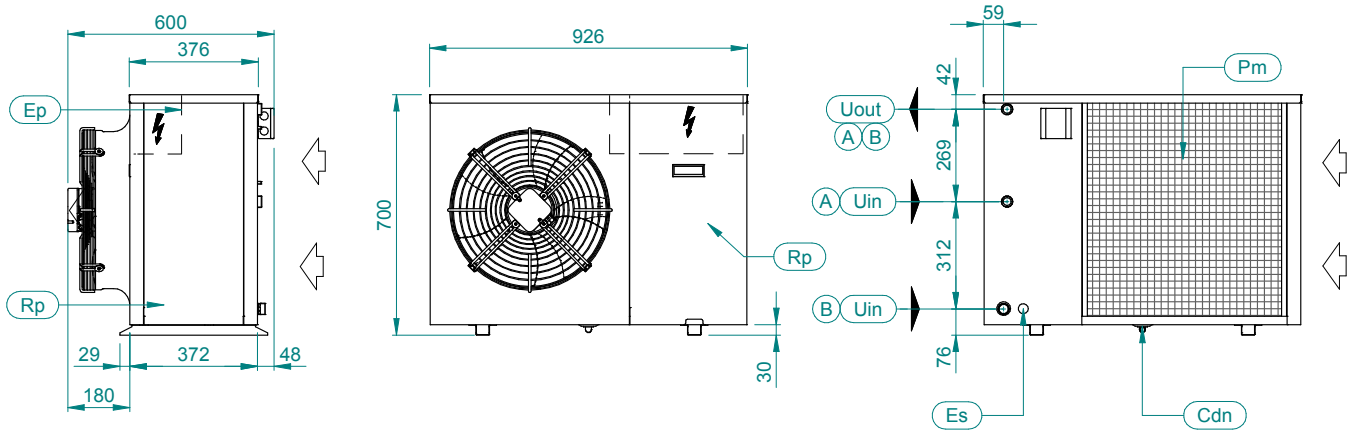

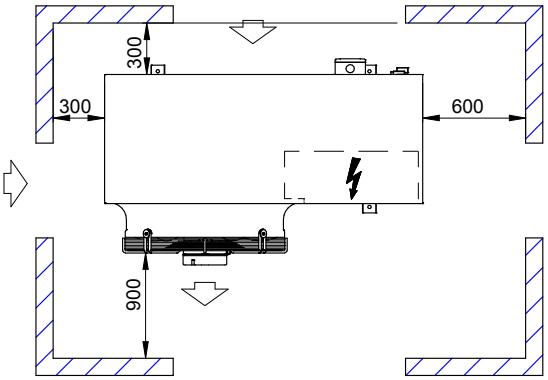

SPAZI DI INSTALLAZIONE / CLEARANCES

CONNESSIONI IDRAULICHE / HYDRAULIC CONNECTION

(A) ACQUA UTILIZZO SENZA MODULO IDRAULICO
USER WATER WITHOUT HYDRAULIC MODULE

(B) ACQUA UTILIZZO CON MODULO IDRAULICO 1P
USER WATER WITH HYDRAULIC MODULE 1P

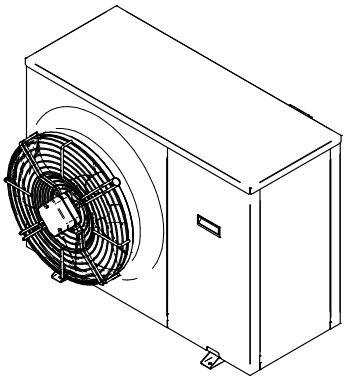

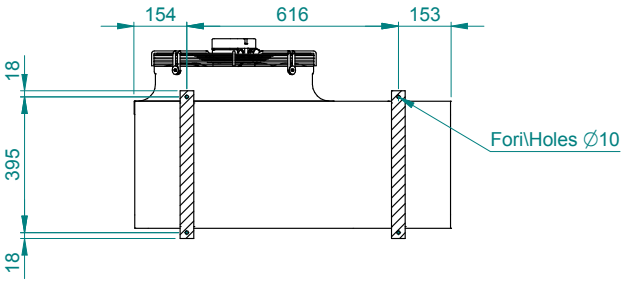

IMPRONTA A TERRA / FOOTPRINT

Ep	QUADRO ELETTRICO ELECTRICAL PANEL		Cdh	SCARICO CONDENSA CONDENSATE DRAIN	ø 18
Es	INGRESSO ALIMENTAZIONE ELETTRICA ELECTRICAL SUPPLY INLET		Uin	INGRESSO ACQUA UTILIZZO USER WATER INLET	1" BSPM
Rp	PANNELLO ASPORTABILE REMOVABLE PANEL		Uout	USCITA ACQUA UTILIZZO USER WATER OUTLET	1" BSPM
Pm	GRIGLIE DI PROTEZIONE PROTECTIVE METAL MESH			FLUSSO ARIA AIR FLOW	

DIMENSIONI - DIMENSIONS		
LUNGHEZZA WIDTH	PROFONDITA' DEPTH	ALTEZZA HEIGHT
926	600	700

MODELLO MODEL	PESO WEIGHT (kg)	PESO IN FUNZIONE OPERATING WEIGHT (kg)
8	88	88
10	93	93
12	102	102
8 1P	96	98
10 1P	101	102
12 1P	110	111

GEYSER 2 MT 1PS Dimensional layout
8-10-12

SD00316 - A

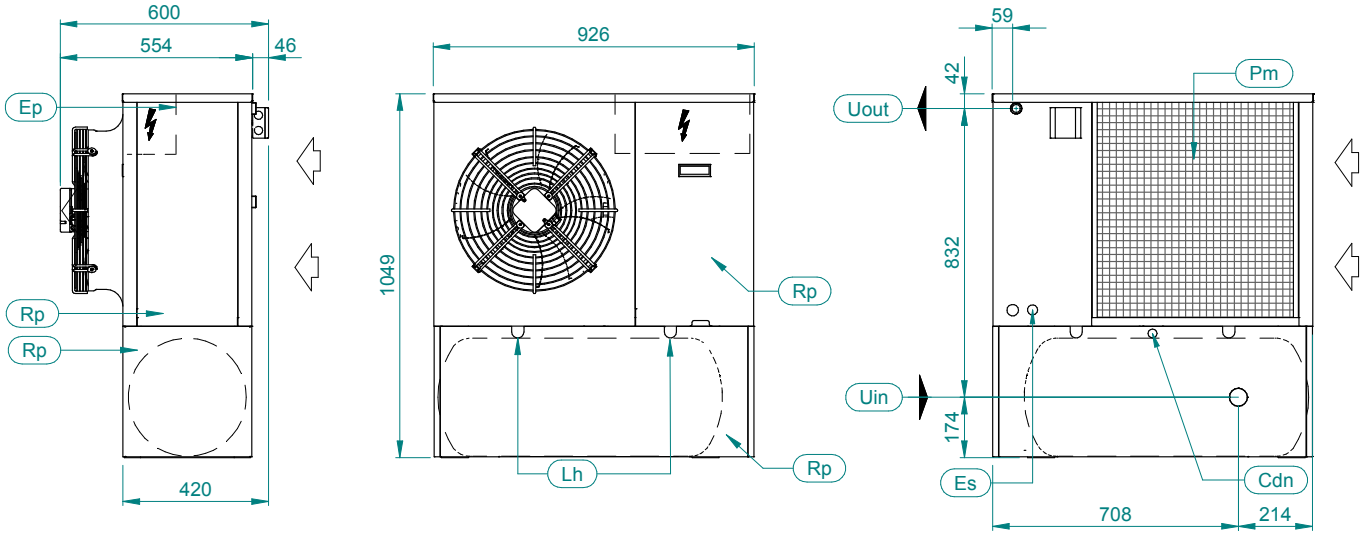

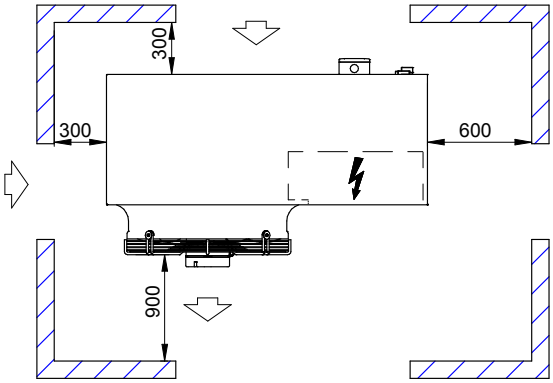

SPAZI DI INSTALLAZIONE / CLEARANCES

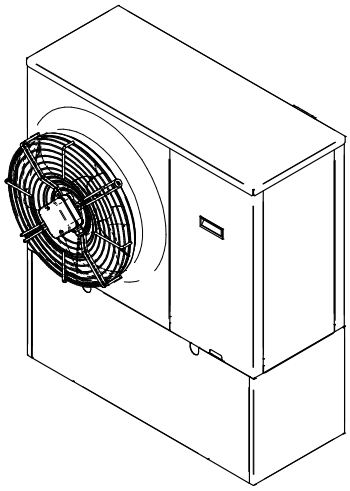

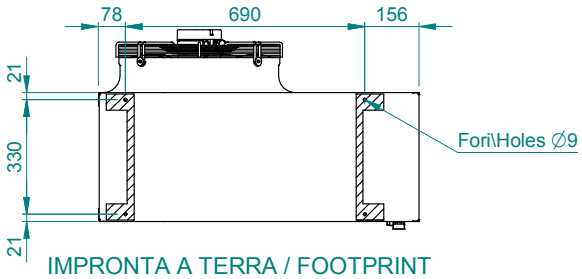

IMPRONTA A TERRA / FOOTPRINT

Ep	QUADRO ELETTRICO ELECTRICAL PANEL	
Es	INGRESSO ALIMENTAZIONE ELETTRICA ELECTRICAL SUPPLY INLET	
Lh	FORI SOLLEVAMENTO LIFTING HOLES	Ø35
Rp	PANNELLO ASPORTABILE REMOVABLE PANEL	
Pm	GRIGLIE DI PROTEZIONE PROTECTIVE METAL MESH	

Cdh	SCARICO CONDENSA CONDENSATE DRAIN	ø 18
Uin	INGRESSO ACQUA UTILIZZO USER WATER INLET	1" BSPM
Uout	USCITA ACQUA UTILIZZO USER WATER OUTLET	1" BSPM
⇦	FLUSSO ARIA AIR FLOW	

DIMENSIONI - DIMENSIONS		
LUNGHEZZA WIDTH	PROFONDITA' DEPTH	ALTEZZA HEIGHT
926	600	1049

MODELLO MODEL	PESO WEIGHT (kg)	PESO IN FUNZIONE OPERATING
8	142	215
10	147	221
12	156	231

GEYSER 2 MT Dimensional layout
16-18-20

SD00317 - A

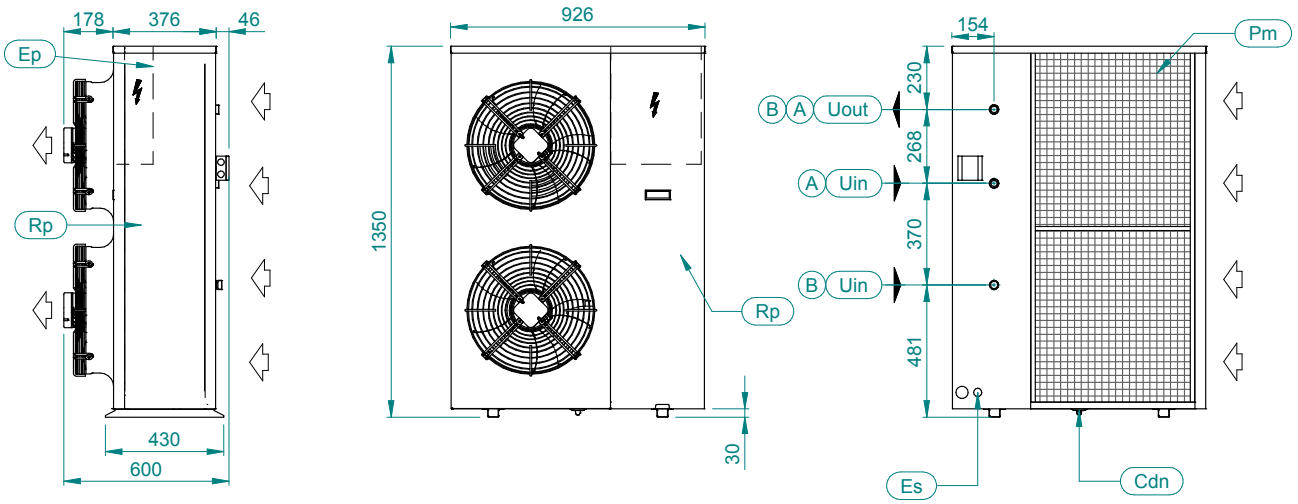

CONNESSIONI IDRAULICHE / HYDRAULIC CONNECTION

(A) ACQUA UTILIZZO SENZA MODULO IDRAULICO
USER WATER WITHOUT HYDRAULIC MODULE

(B) ACQUA UTILIZZO CON MODULO IDRAULICO 1P
USER WATER WITH HYDRAULIC MODULE 1P

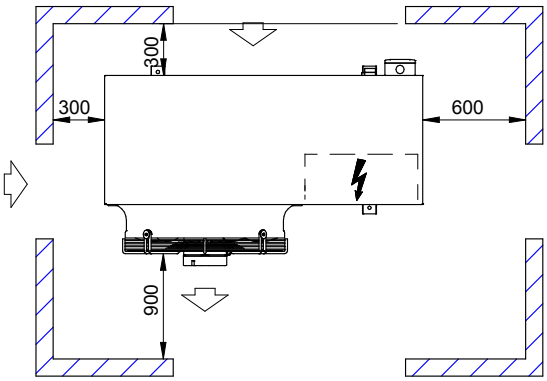

SPAZI DI INSTALLAZIONE / CLEARANCES

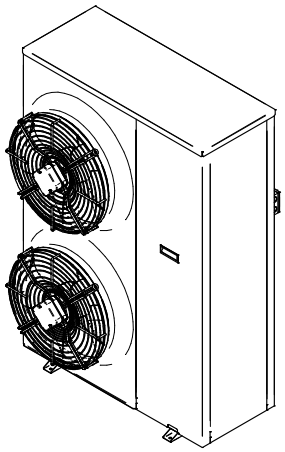

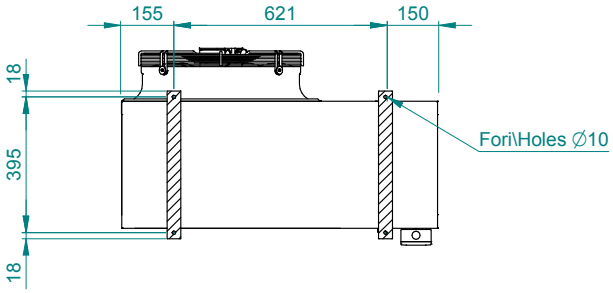

IMPRONTA A TERRA / FOOTPRINT

Ep	QUADRO ELETTRICO ELECTRICAL PANEL	
Es	INGRESSO ALIMENTAZIONE ELETTRICA ELECTRICAL SUPPLY INLET	
Rp	PANNELLO ASPORTABILE REMOVABLE PANEL	
Pm	GRIGLIE DI PROTEZIONE PROTECTIVE METAL MESH	

Cdh	SCARICO CONDENSA CONDENSATE DRAIN	ø 18
Uin	INGRESSO ACQUA UTILIZZO USER WATER INLET	1" BSPM
Uout	USCITA ACQUA UTILIZZO USER WATER OUTLET	1" BSPM
⇦	FLUSSO ARIA AIR FLOW	

DIMENSIONI - DIMENSIONS		
LUNGHEZZA WIDTH	PROFONDITA' DEPTH	ALTEZZA HEIGHT
926	600	1350

MODELLO MODEL	PESO WEIGHT (kg)	PESO IN FUNZIONE OPERATING WEIGHT (kg)
16	134	135
18	150	151
20	165	166
16 1P	146	147
18 1P	162	163
20 1P	177	178

GEYSER 2 MT 1PS Dimensional layout
16-18-20

SD00318 - A

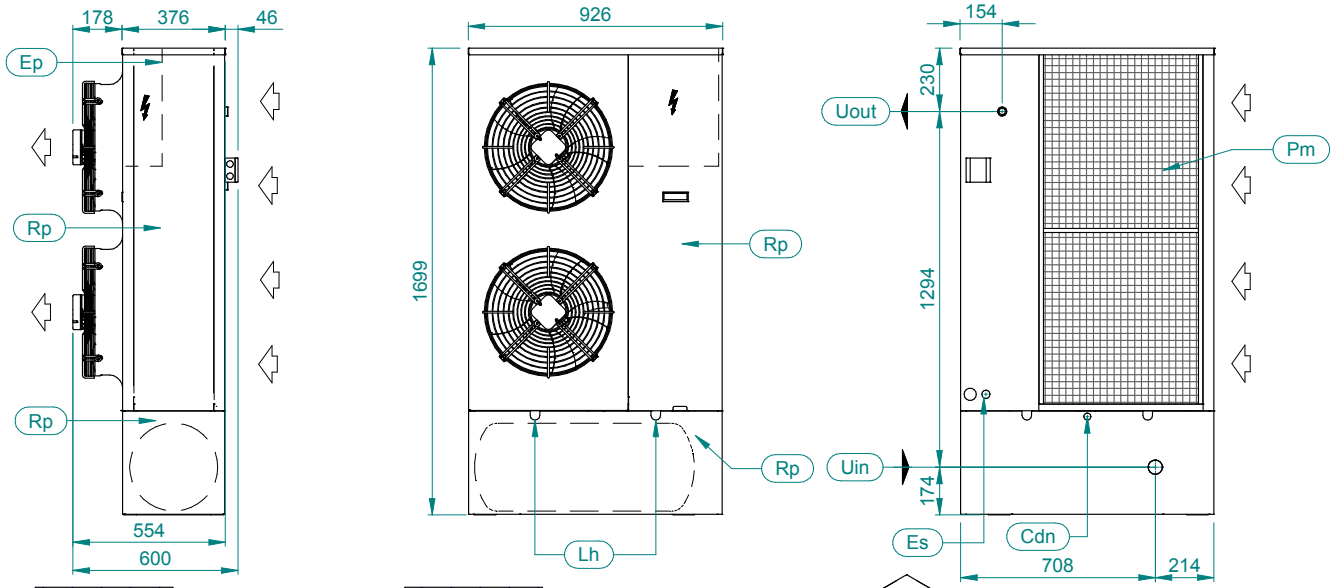

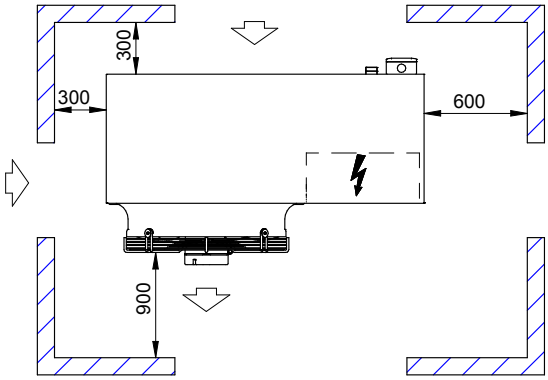

SPAZI DI INSTALLAZIONE / CLEARANCES

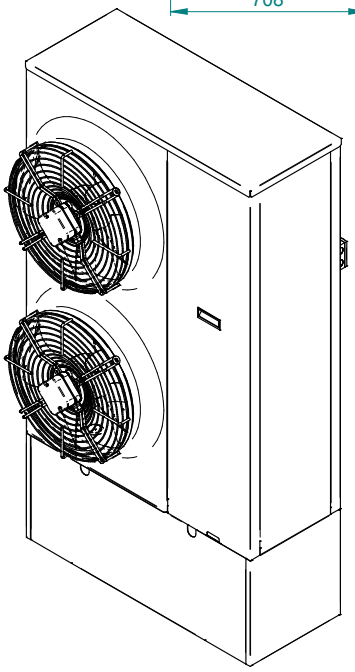

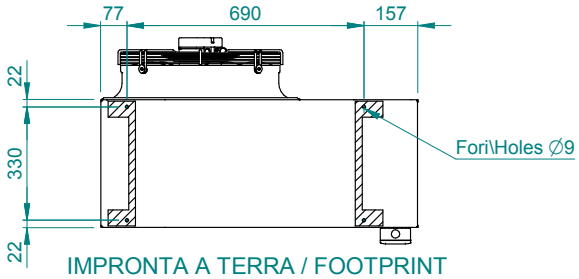

IMPRONTA A TERRA / FOOTPRINT

Ep	QUADRO ELETTRICO ELECTRICAL PANEL	
Es	INGRESSO ALIMENTAZIONE ELETTRICA ELECTRICAL SUPPLY INLET	
Lh	FORI SOLLEVAMENTO LIFTING HOLES	Ø28
Rp	PANNELLO ASPORTABILE REMOVABLE PANEL	
Pm	GRIGLIE DI PROTEZIONE PROTECTIVE METAL MESH	

Cdh	SCARICO CONDENSA CONDENSATE DRAIN	ø 18
Uin	INGRESSO ACQUA UTILIZZO USER WATER INLET	1" BSPM
Uout	USCITA ACQUA UTILIZZO USER WATER OUTLET	1" BSPM
⇦	FLUSSO ARIA AIR FLOW	

DIMENSIONI - DIMENSIONS		
LUNGHEZZA WIDTH	PROFONDITA' DEPTH	ALTEZZA HEIGHT
926	600	1699

MODELLO MODEL	PESO WEIGHT (kg)	PESO IN FUNZIONE OPERATING WEIGHT (kg)
16	191	261
18	207	277
20	222	292

GEYSER 2 MT Dimensional layout
23-25

SD00319 - A

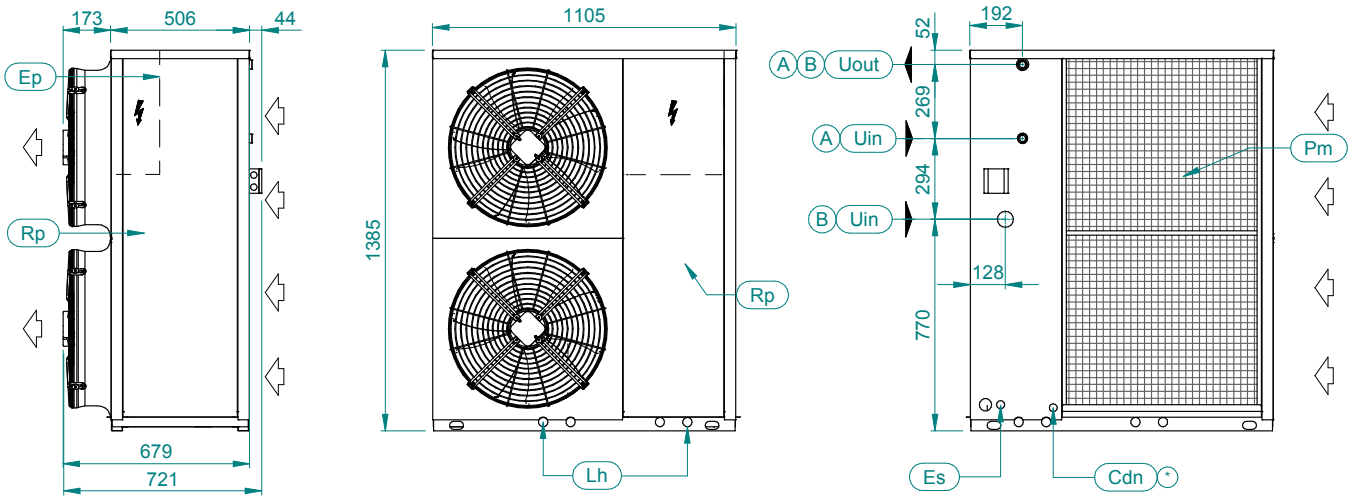

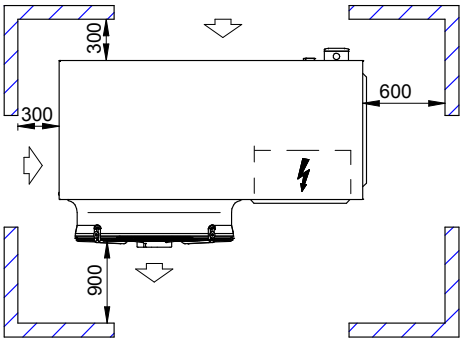

SPAZI DI INSTALLAZIONE / CLEARANCES

CONNESSIONI IDRAULICHE / HYDRAULIC CONNECTION

(A) ACQUA UTILIZZO SENZA MODULO IDRAULICO
USER WATER WITHOUT HYDRAULIC MODULE

(B) ACQUA UTILIZZO CON MODULO IDRAULICO 1P
USER WATER WITH HYDRAULIC MODULE 1P

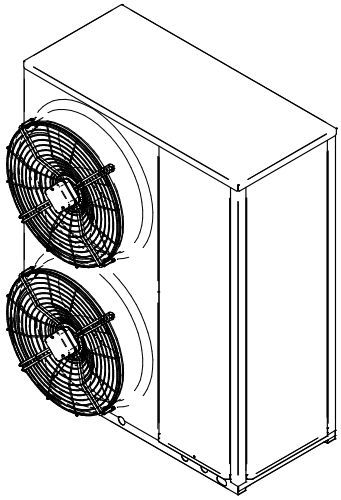

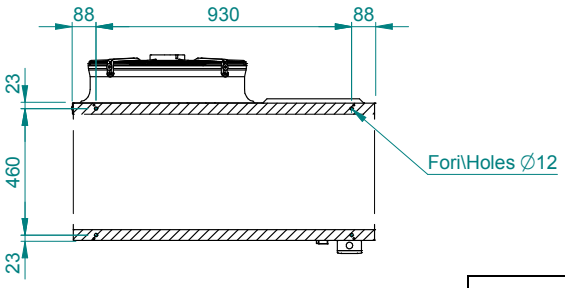

IMPRONTA A TERRA / FOOTPRINT

Uin		Uout
(A) 1" BSPM	(B) 1 1\4" BSPM	(A) (B) 1" BSPM

Ep	QUADRO ELETTRICO ELECTRICAL PANEL	
Es	INGRESSO ALIMENTAZIONE ELETTRICA ELECTRICAL SUPPLY INLET	
Lh	FORI SOLLEVAMENTO LIFTING HOLES	Ø34
Rp	PANNELLO ASPORTABILE REMOVABLE PANEL	
Pm	GRIGLIE DI PROTEZIONE PROTECTIVE METAL MESH	

Cdh	SCARICO CONDENSA CONDENSATE DRAIN	ø 18
Uin	INGRESSO ACQUA UTILIZZO USER WATER INLET	
Uout	USCITA ACQUA UTILIZZO USER WATER OUTLET	
⇦	FLUSSO ARIA AIR FLOW	

(*) OPZIONALE \ OPTIONAL

DIMENSIONI - DIMENSIONS		
LUNGHEZZA WIDTH	PROFONDITA' DEPTH	ALTEZZA HEIGHT
1105	721	1385

MODELLO MODEL	PESO WEIGHT (kg)	PESO IN FUNZIONE OPERATING WEIGHT (kg)
23	210	212
25	231	233
23 1P	223	225
25 1P	244	246

GEYSER 2 MT 1PS Dimensional layout
23-25

SD00320 - A

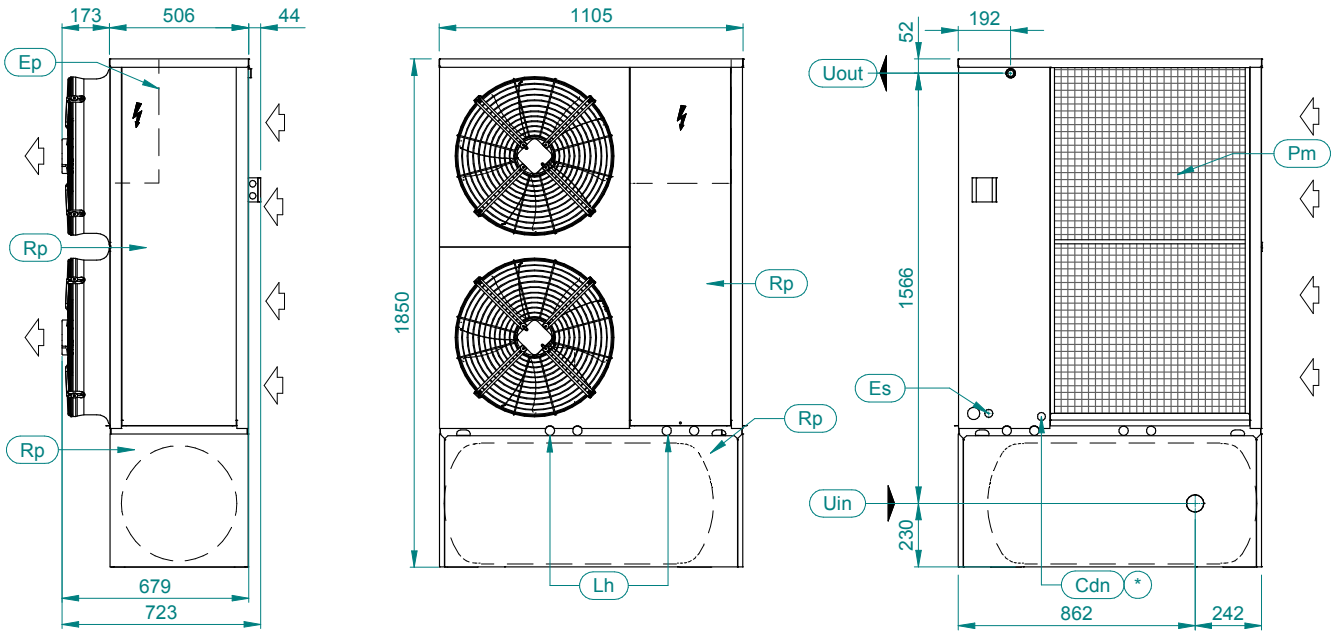

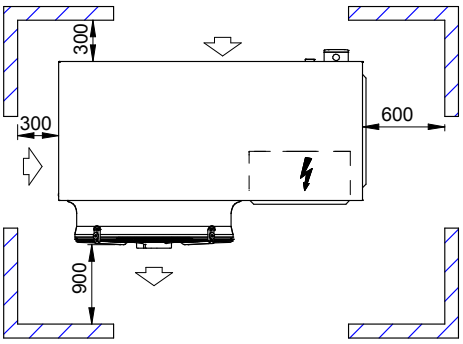

SPAZI DI INSTALLAZIONE / CLEARANCES

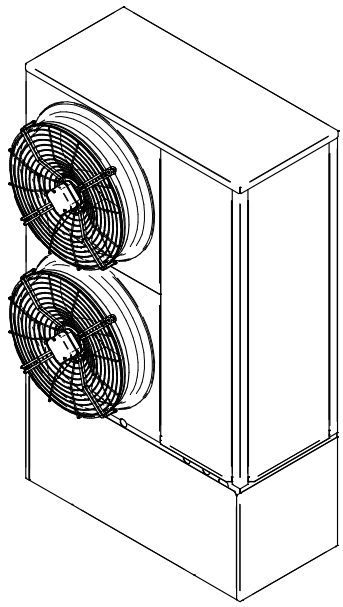

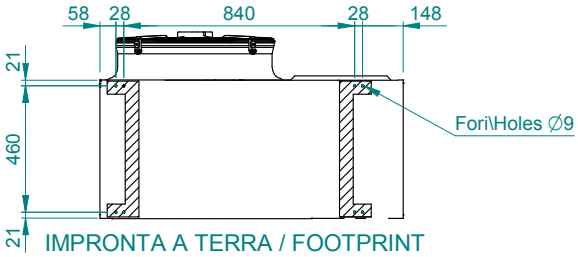

IMPRONTA A TERRA / FOOTPRINT

Ep	QUADRO ELETTRICO ELECTRICAL PANEL	
Es	INGRESSO ALIMENTAZIONE ELETTRICA ELECTRICAL SUPPLY INLET	
Lh	FORI SOLLEVAMENTO LIFTING HOLES	Ø34
Rp	PANNELLO ASPORTABILE REMOVABLE PANEL	
Pm	GRIGLIE DI PROTEZIONE PROTECTIVE METAL MESH	

Cdh	SCARICO CONDENSA CONDENSATE DRAIN	ø 22
Uin	INGRESSO ACQUA UTILIZZO USER WATER INLET	1" 1/4 BSPM
Uout	USCITA ACQUA UTILIZZO USER WATER OUTLET	1" BSPM
	FLUSSO ARIA AIR FLOW	

(*) OPZIONALE \ OPTIONAL

DIMENSIONI - DIMENSIONS		
LUNGHEZZA WIDTH	PROFONDITA' DEPTH	ALTEZZA HEIGHT
1105	723	1850

MODELLO MODEL	PESO WEIGHT (kg)	PESO IN FUNZIONE OPERATING WEIGHT (kg)
23	288	418
25	309	439

GEYSER 2 MT Dimensional layout

SD00321 - A

29-34-38-42

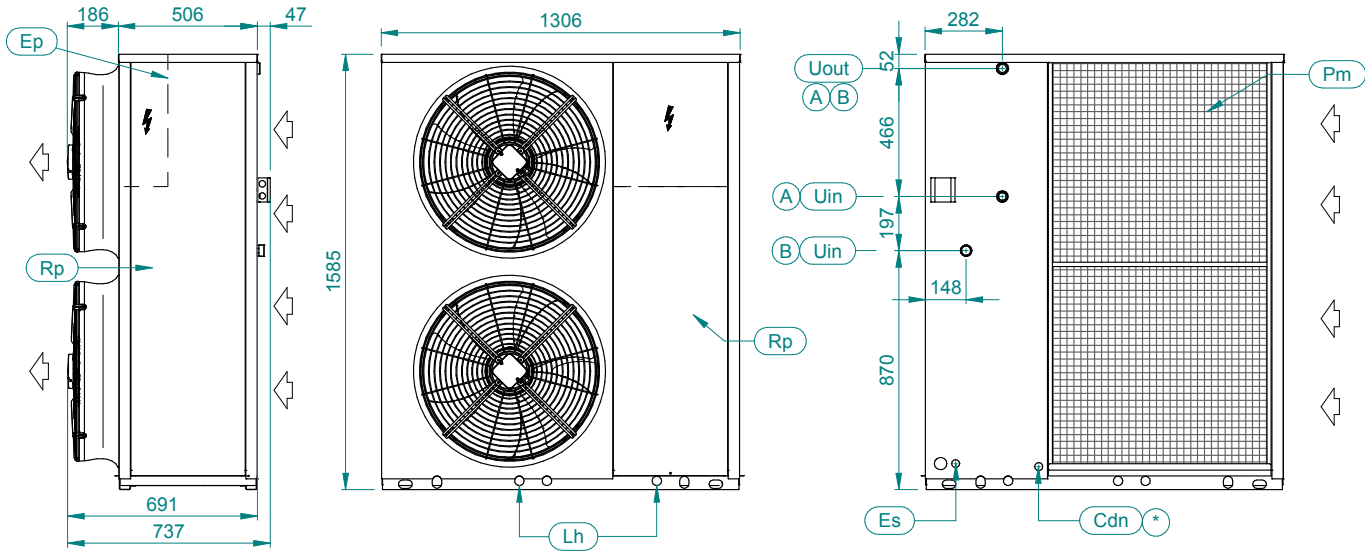

CONNESSIONI IDRAULICHE / HYDRAULIC CONNECTION

(A) ACQUA UTILIZZO SENZA MODULO IDRAULICO
USER WATER WITHOUT HYDRAULIC MODULE

(B) ACQUA UTILIZZO CON MODULO IDRAULICO 1P
USER WATER WITH HYDRAULIC MODULE 1P

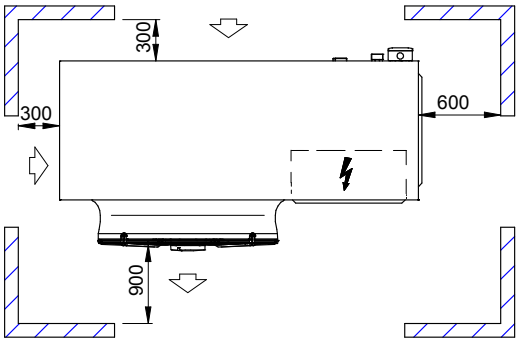

SPAZI DI INSTALLAZIONE / CLEARANCES

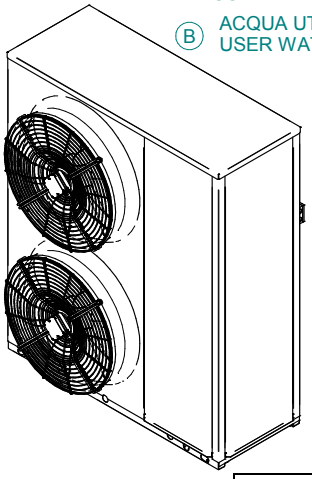

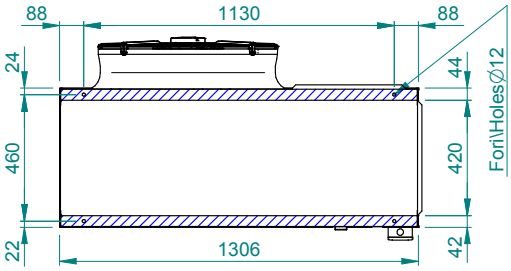

IMPRONTA A TERRA \ FOOTPRINT

Ep	QUADRO ELETTRICO ELECTRICAL PANEL	
Es	INGRESSO ALIMENTAZIONE ELETTRICA ELECTRICAL SUPPLY INLET	
Lh	FORI SOLLEVAMENTO LIFTING HOLES	Ø34
Rp	PANNELLO ASPORTABILE REMOVABLE PANEL	
Pm	GRIGLIE DI PROTEZIONE PROTECTIVE METAL MESH	

Cdh	SCARICO CONDENSA CONDENSATE DRAIN	ø 18
Uin	INGRESSO ACQUA UTILIZZO USER WATER INLET	1" 1/4 BSPM
Uout	USCITA ACQUA UTILIZZO USER WATER OUTLET	1" 1/4 BSPM
⇦	FLUSSO ARIA AIR FLOW	

(*) OPZIONALE \ OPTIONAL

DIMENSIONI - DIMENSIONS		
LUNGHEZZA WIDTH	PROFONDITA' DEPTH	ALTEZZA HEIGHT
1306	737	1585

MODELLO MODEL	PESO WEIGHT (kg)	PESO IN FUNZIONE OPERATING WEIGHT (kg)
29	356	358
34	365	367
38	385	387
42	395	398
29 1P	371	373
34 1P	380	382
38 1P	400	402
42 1P	410	413

GEYSER 2 MT 1PS Dimensional layout
29-34-38-42

SD00322 - A

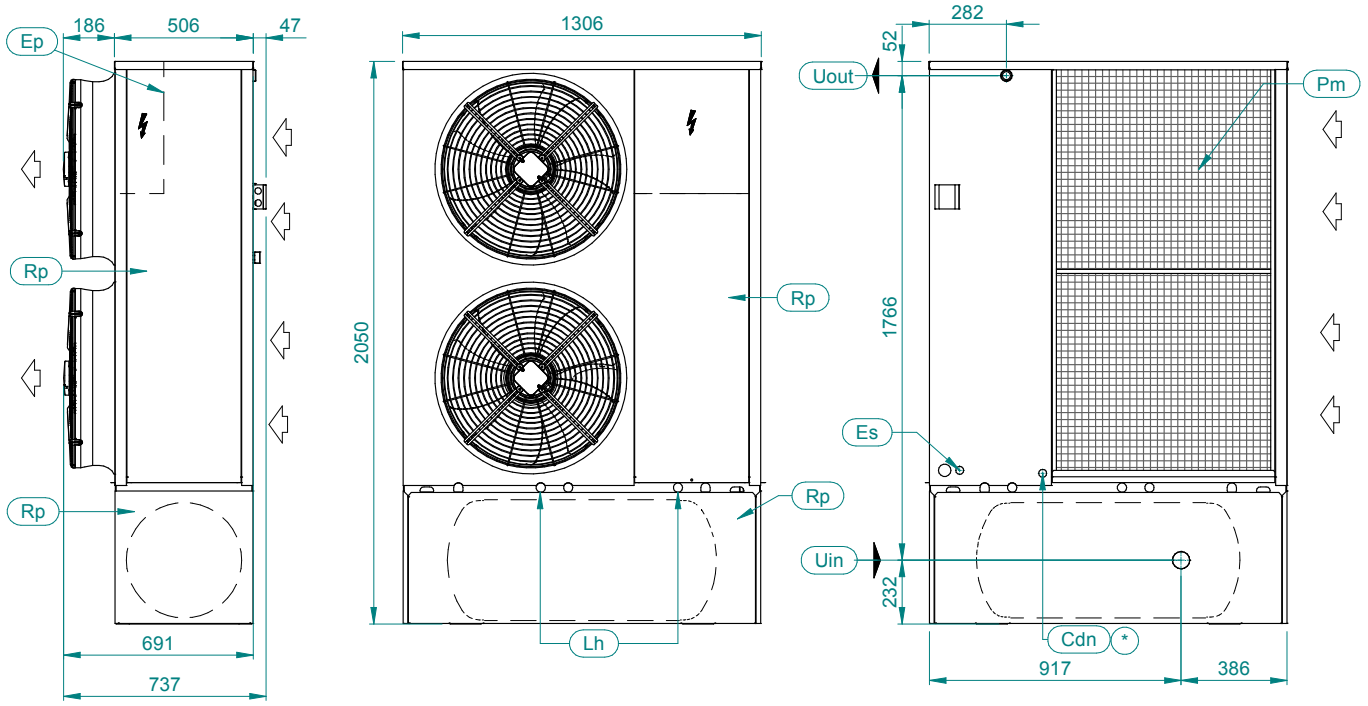

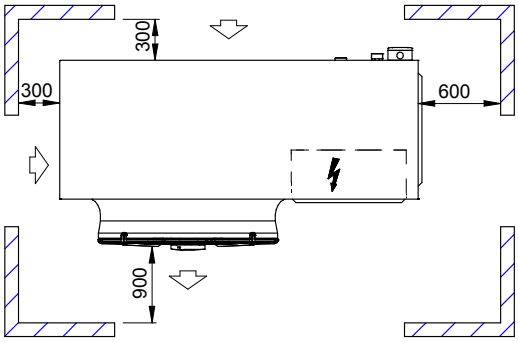

SPAZI DI INSTALLAZIONE / CLEARANCES

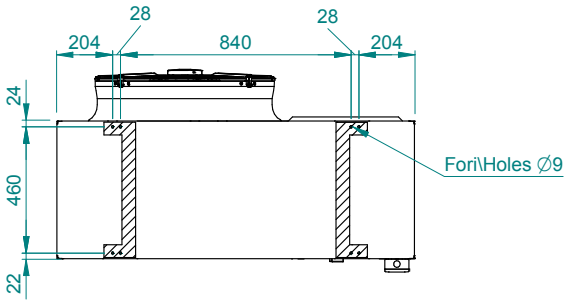

IMPRONTA A TERRA / FOOTPRINT

Ep	QUADRO ELETTRICO ELECTRICAL PANEL	
Es	INGRESSO ALIMENTAZIONE ELETTRICA ELECTRICAL SUPPLY INLET	
Lh	FORI SOLLEVAMENTO LIFTING HOLES	Ø34
Rp	PANNELLO ASPORTABILE REMOVABLE PANEL	
Pm	GRIGLIE DI PROTEZIONE PROTECTIVE METAL MESH	

Cdh	SCARICO CONDENSA CONDENSATE DRAIN	ø 22
Uin	INGRESSO ACQUA UTILIZZO USER WATER INLET	1" 1/4 BSPM
Uout	USCITA ACQUA UTILIZZO USER WATER OUTLET	1" 1/4 BSPM
	FLUSSO ARIA AIR FLOW	

(*) OPZIONALE \ OPTIONAL

DIMENSIONI - DIMENSIONS		
LUNGHEZZA WIDTH	PROFONDITA' DEPTH	ALTEZZA HEIGHT
1306	737	2050

MODELLO MODEL	PESO WEIGHT (kg)	PESO IN FUNZIONE OPERATING WEIGHT (kg)
29	436	566
34	445	575
38	465	595
42	475	605

GEYSER 2 MT/HWS Dimensional layout
8-20

SD00323 - A

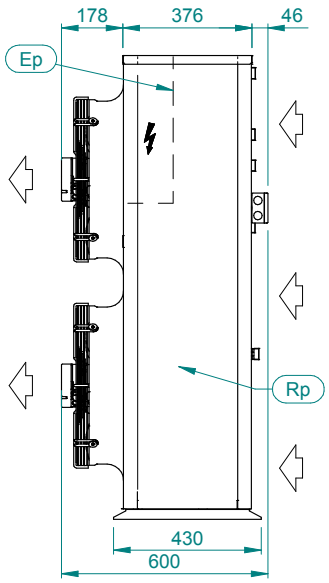

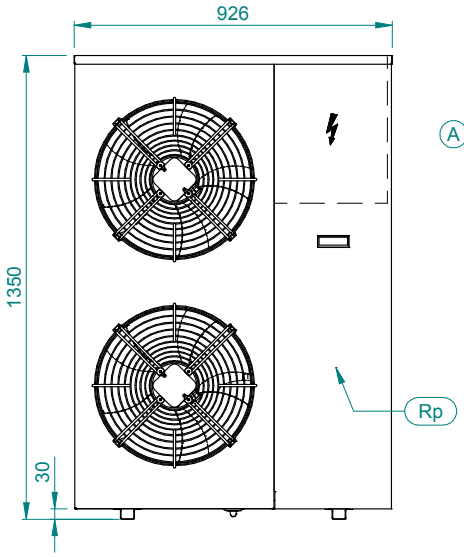

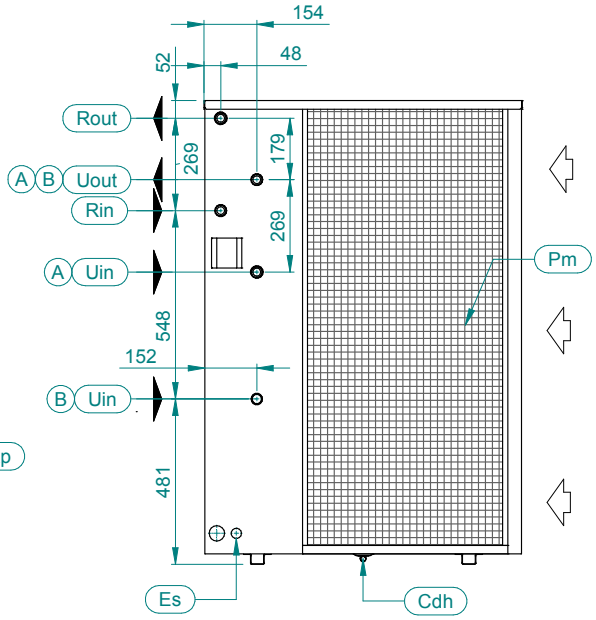

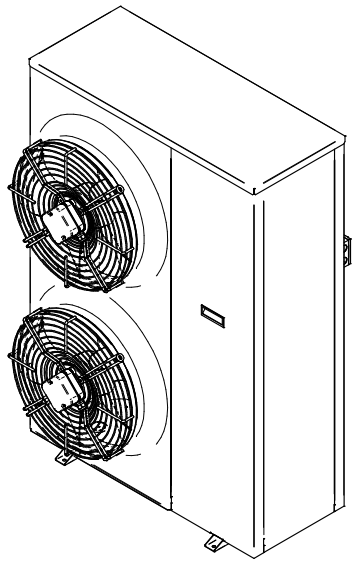

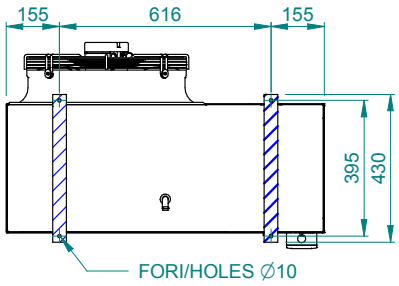

IMPRONTA A TERRA / FOOTPRINT

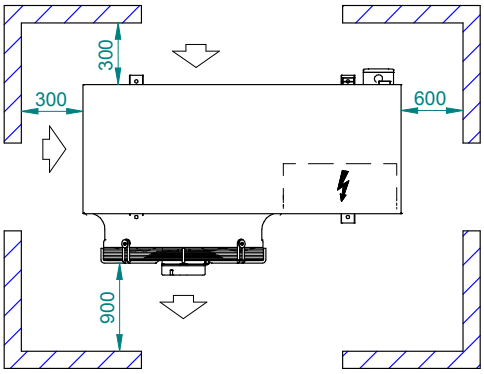

SPAZI DI INSTALLAZIONE / CLEARANCES

CONNESSIONI IDRAULICHE / HYDRAULIC CONNECTION

(A) ACQUA UTILIZZO SENZA MODULO IDRAULICO
USER WATER WITHOUT HYDRAULIC MODULE

(B) ACQUA UTILIZZO CON MODULO IDRAULICO 1P
USER WATER WITH HYDRAULIC MODULE 1P

Ep	QUADRO ELETTRICO ELECTRICAL PANEL	
Es	INGRESSO ALIMENTAZIONE ELETTRICA ELECTRICAL SUPPLY INLET	
Lh	FORI SOLLEVAMENTO LIFTING HOLES	Ø28
Rp	PANNELLO ASPORTABILE REMOVABLE PANEL	
Pm	GRIGLIE DI PROTEZIONE PROTECTIVE METAL MESH	
Cdh	SCARICO CONDENSA CONDENSATE DRAIN	ø 18

Uin	INGRESSO ACQUA UTILIZZO USER WATER INLET	1" BSPM
Uout	USCITA ACQUA UTILIZZO USER WATER OUTLET	1" BSPM
Rin	INGRESSO ACQUA SANITARIO RECOVERY WATER INLET	1" BSPM
Rout	USCITA ACQUA SANITARIO RECOVERY WATER OUTLET	1" BSPM
⇦	FLUSSO ARIA AIR FLOW	

DIMENSIONI - DIMENSIONS		
LUNGHEZZA WIDTH	PROFONDITA' DEPTH	ALTEZZA HEIGHT
926	600	1350

MODELLO MODEL	PESO WEIGHT (kg)	PESO IN FUNZIONE OPERATING WEIGHT (kg)
8	129	130
10	133	134
12	137	138
16	141	142
18	158	159
20	174	175
8 1P	137	138
10 1P	141	142
12 1P	145	146
16 1P	153	154
18 1P	170	171
20 1P	186	187

GEYSER 2 MT/HWS 1PS Dimensional layout
8-20

SD00324 - A

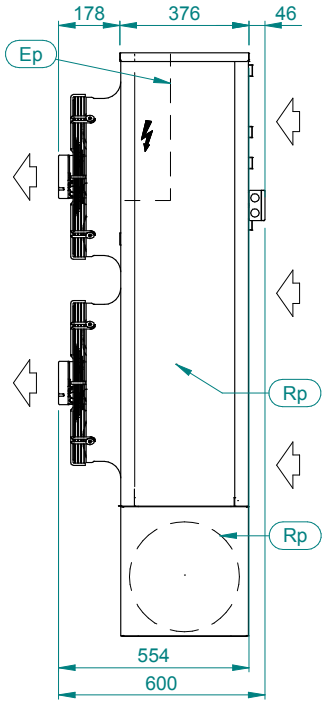

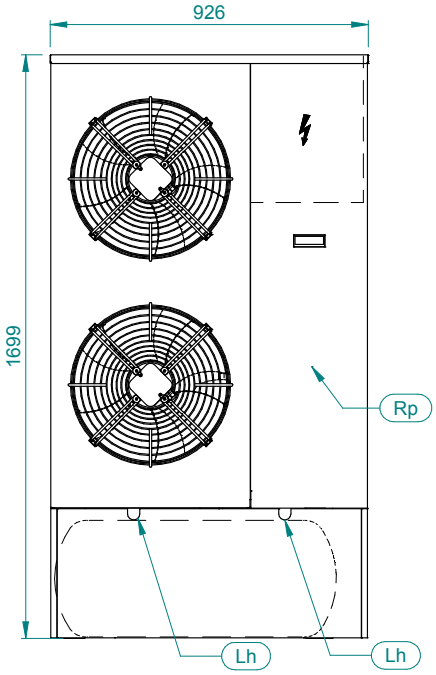

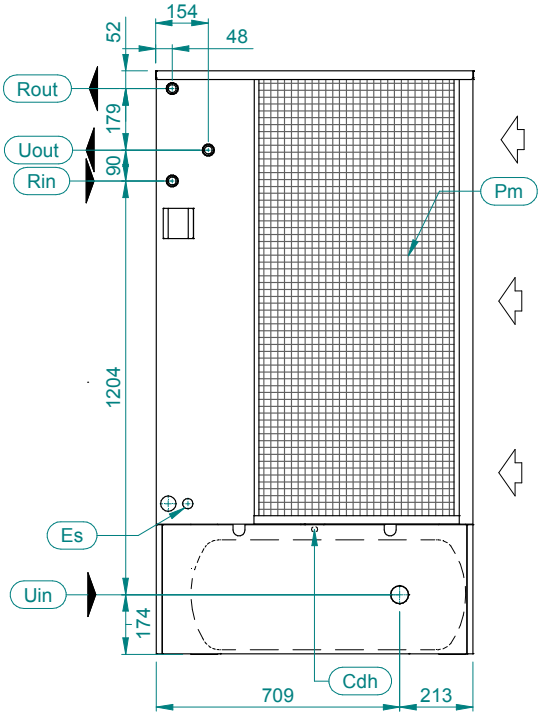

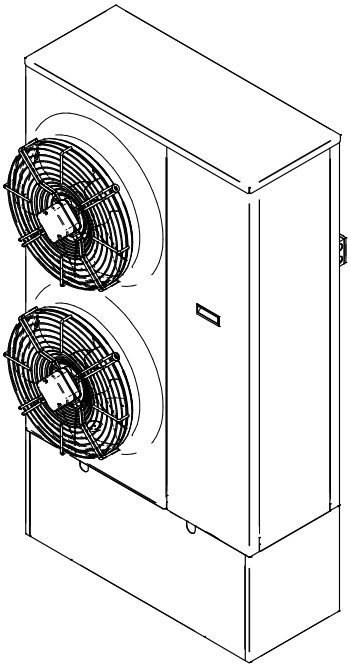

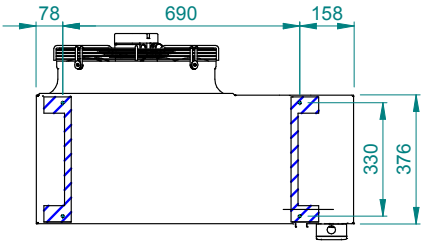

IMPRONTA A TERRA / FOOTPRINT

MODELLO MODEL	PESO WEIGHT (kg)	PESO IN FUNZIONE OPERATING WEIGHT (kg)
8	182	252
10	186	256
12	190	260
16	198	268
18	215	285
20	231	301

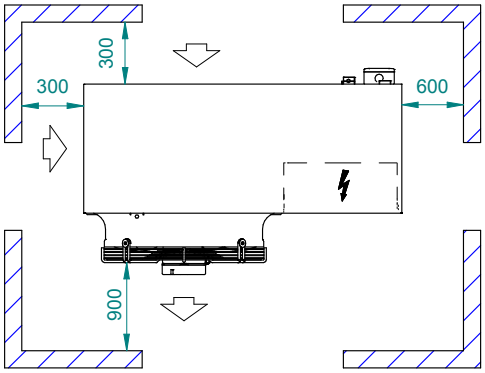

SPAZI DI INSTALLAZIONE / CLEARANCES

DIMENSIONI - DIMENSIONS		
LUNGHEZZA WIDTH	PROFONDITA' DEPTH	ALTEZZA HEIGHT
926	600	1699

Ep	QUADRO ELETTRICO / ELECTRICAL PANEL	
Es	INGRESSO ALIMENTAZIONE ELETTRICA / ELECTRICAL SUPPLY INLET	
Lh	FORI SOLLEVAMENTO / LIFTING HOLES	Ø28
Rp	PANNELLO ASPORTABILE / REMOVABLE PANEL	
Pm	GRIGLIE DI PROTEZIONE / PROTECTIVE METAL MESH	
Cdh	SCARICO CONDENSA / CONDENSATE DRAIN	ø 18

Uin	INGRESSO ACQUA UTILIZZO / USER WATER INLET	1" BSPM
Uout	USCITA ACQUA UTILIZZO / USER WATER OUTLET	1" BSPM
Rin	INGRESSO ACQUA RECUPERO / RECOVERY WATER INLET	1" BSPM
Rout	USCITA ACQUA RECUPERO / RECOVERY WATER OUTLET	1" BSPM
	FLUSSO ARIA / AIR FLOW	

GEYSER 2 MT/HWS Dimensional layout

SD00325 - A

23-25

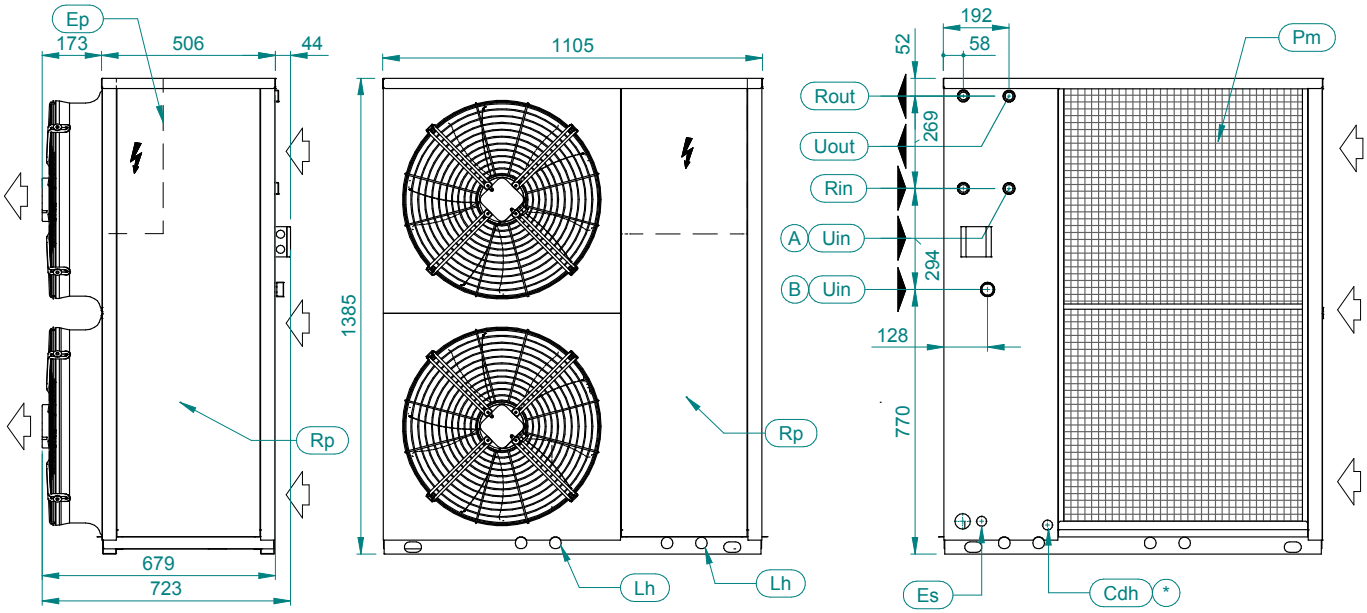

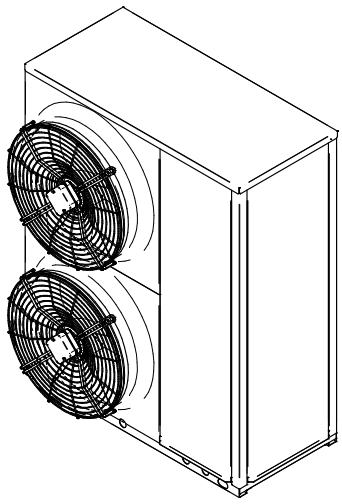

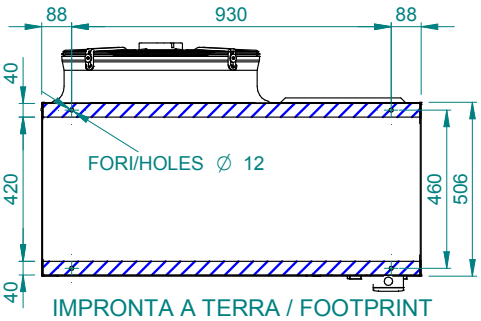

IMPRONTA A TERRA / FOOTPRINT

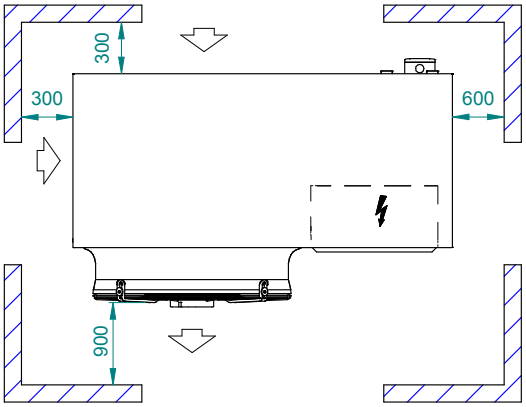

SPAZI DI INSTALLAZIONE / CLEARANCES

Uin		Uout
A 1" BSPM	B 1 1\4" BSPM	A B 1" BSPM

DIMENSIONI - DIMENSIONS		
LUNGHEZZA WIDTH	PROFONDITA' DEPTH	ALTEZZA HEIGHT
1105	723	1385

CONNESSIONI IDRAULICHE / HYDRAULIC CONNECTION

A ACQUA UTILIZZO SENZA MODULO IDRAULICO
USER WATER WITHOUT HYDRAULIC MODULE

B ACQUA UTILIZZO CON MODULO IDRAULICO 1P
USER WATER WITH HYDRAULIC MODULE 1P

MODELLO MODEL	PESO WEIGHT (kg)	PESO IN FUNZIONE OPERATING WEIGHT (kg)
23	220	222
25	242	244
23 1P	233	235
25 1P	255	257

Ep	QUADRO ELETTRICO / ELECTRICAL PANEL	
Es	INGRESSO ALIMENTAZIONE ELETTRICA / ELECTRICAL SUPPLY INLET	
Lh	FORI SOLLEVAMENTO / LIFTING HOLES	Ø34
Rp	PANNELLO ASPORTABILE / REMOVABLE PANEL	
Pm	GRIGLIE DI PROTEZIONE / PROTECTIVE METAL MESH	
Cdh	SCARICO CONDENSA / CONDENSATE DRAIN	ø 20

Uin	INGRESSO ACQUA UTILIZZO / USER WATER INLET	
Uout	USCITA ACQUA UTILIZZO / USER WATER OUTLET	
Rin	INGRESSO ACQUA RECUPERO / RECOVERY WATER INLET	1" BSPM
Rout	USCITA ACQUA RECUPERO / RECOVERY WATER OUTLET	1" BSPM
⇦	FLUSSO ARIA / AIR FLOW	

(*) OPZIONALE / OPTIONAL

GEYSER 2 MT/HWS 1PS Dimensional layout
23-25

SD00326 - A

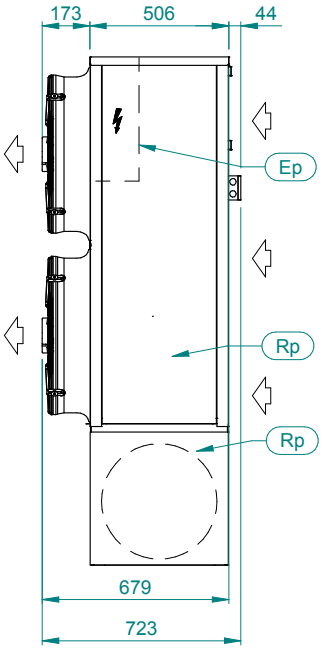

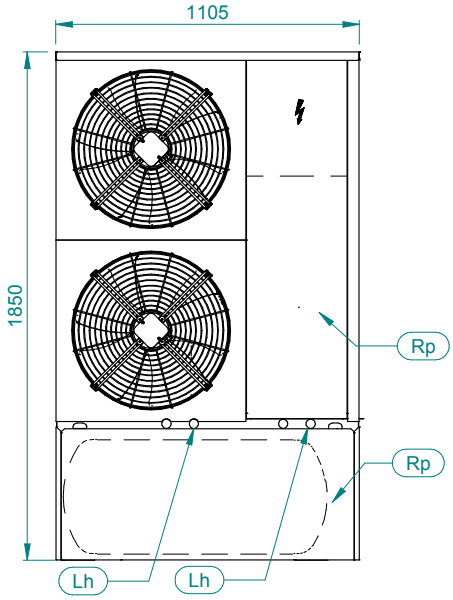

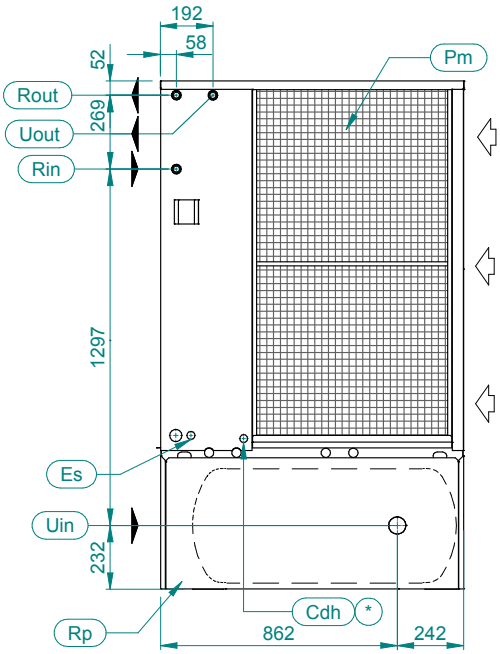

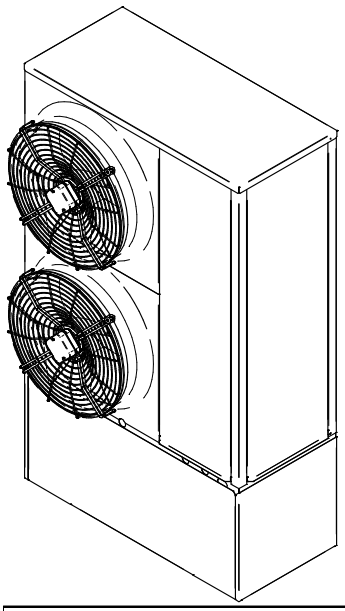

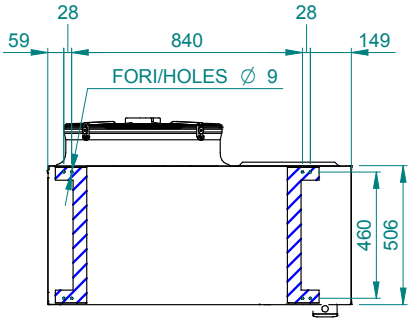

IMPRONTA A TERRA / FOOTPRINT

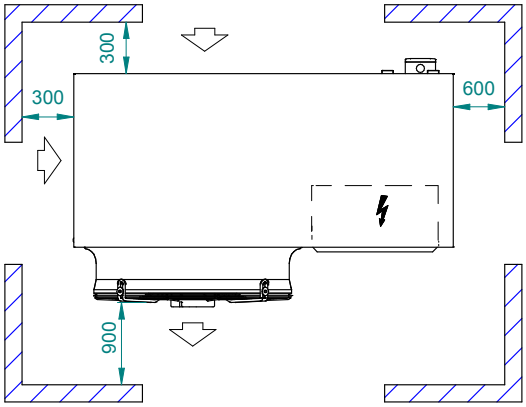

SPAZI DI INSTALLAZIONE / CLEARANCES
1:20

DIMENSIONI - DIMENSIONS		
LUNGHEZZA WIDTH	PROFONDITA' DEPTH	ALTEZZA HEIGHT
1105	723	1850

MODELLO MODEL	PESO WEIGHT (kg)	PESO IN FUNZIONE OPERATING WEIGHT (kg)
23	298	328
25	320	450

Ep	QUADRO ELETTRICO / ELECTRICAL PANEL	
Es	INGRESSO ALIMENTAZIONE ELETTRICA / ELECTRICAL SUPPLY INLET	
Lh	FORI SOLLEVAMENTO / LIFTING HOLES	Ø34
Rp	PANNELLO ASPORTABILE / REMOVABLE PANEL	
Pm	GRIGLIE DI PROTEZIONE / PROTECTIVE METAL MESH	
Cdh	SCARICO CONDENSA / CONDENSATE DRAIN	ø 22

Uin	INGRESSO ACQUA UTILIZZO / USER WATER INLET	1" 1/4 BSPM
Uout	USCITA ACQUA UTILIZZO / USER WATER OUTLET	1" BSPM
Rin	INGRESSO ACQUA RECUPERO / RECOVERY WATER INLET	1" BSPM
Rout	USCITA ACQUA RECUPERO / RECOVERY WATER OUTLET	1" BSPM
⇦	FLUSSO ARIA / AIR FLOW	

(*) OPZIONALE / OPTIONAL

GEYSER 2 MT/HWS Dimensional layout

SD00327 - A

29-34-38-42

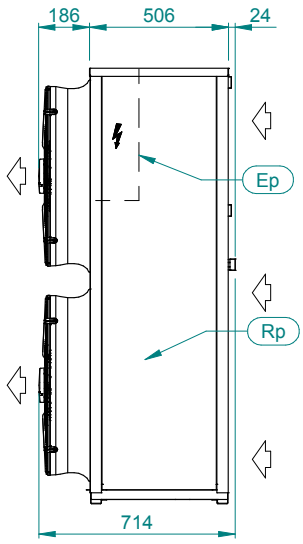

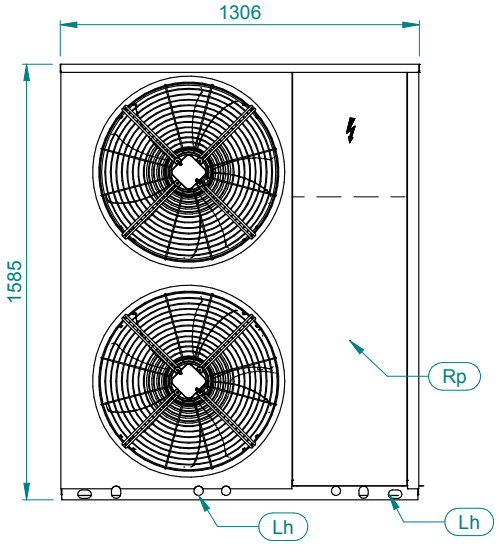

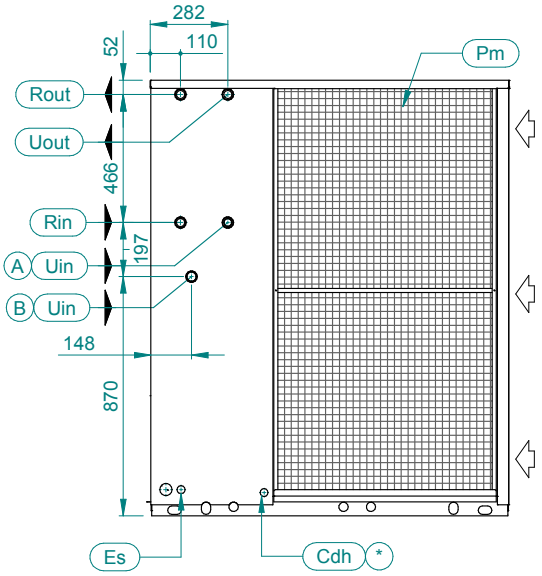

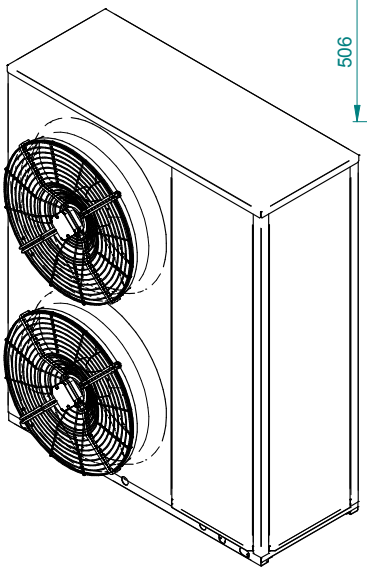

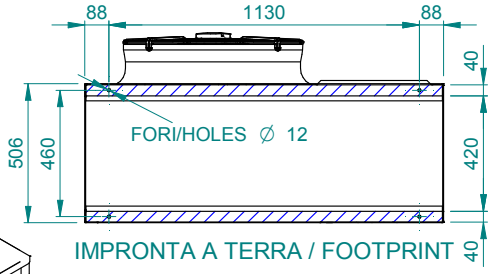

IMPRONTA A TERRA / FOOTPRINT

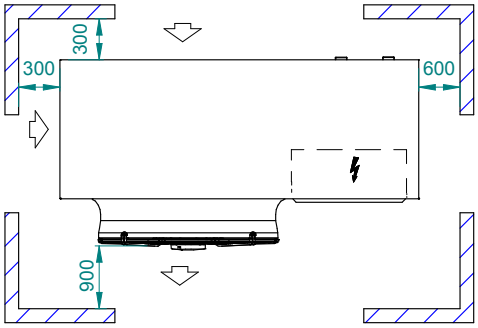

SPAZI DI INSTALLAZIONE / CLEARANCES

MODELLO MODEL	PESO WEIGHT (kg)	PESO IN FUNZIONE OPERATING WEIGHT (kg)
29	368	370
34	378	380
38	399	401
42	410	413
29 1P	383	385
34 1P	393	395
38 1P	414	416
42 1P	425	428

DIMENSIONI - DIMENSIONS		
LUNGHEZZA WIDTH	PROFONDITA' DEPTH	ALTEZZA HEIGHT
1306	714	1585

CONNESSIONI IDRAULICHE / HYDRAULIC CONNECTION

(A) ACQUA UTILIZZO SENZA MODULO IDRAULICO
USER WATER WITHOUT HYDRAULIC MODULE

(B) ACQUA UTILIZZO CON MODULO IDRAULICO 1P
USER WATER WITH HYDRAULIC MODULE 1P

Ep	QUADRO ELETTRICO / ELECTRICAL PANEL	
Es	INGRESSO ALIMENTAZIONE ELETTRICA / ELECTRICAL SUPPLY INLET	
Lh	FORI SOLLEVAMENTO / LIFTING HOLES	Ø34
Rp	PANNELLO ASPORTABILE / REMOVABLE PANEL	
Pm	GRIGLIE DI PROTEZIONE / PROTECTIVE METAL MESH	
Cdh	SCARICO CONDENSA / CONDENSATE DRAIN	ø 20

Uin	INGRESSO ACQUA UTILIZZO / USER WATER INLET	1" 1/4 BSPM
Uout	USCITA ACQUA UTILIZZO / USER WATER OUTLET	1" 1/4 BSPM
Rin	INGRESSO ACQUA RECUPERO / RECOVERY WATER INLET	1" 1/4 BSPM
Rout	USCITA ACQUA RECUPERO / RECOVERY WATER OUTLET	1" 1/4 BSPM
⇦	FLUSSO ARIA / AIR FLOW	

(*) OPZIONALE / OPTIONAL

GEYSER 2 MT/HWS 1PS Dimensional layout
29-34-38-42

SD00328 - A

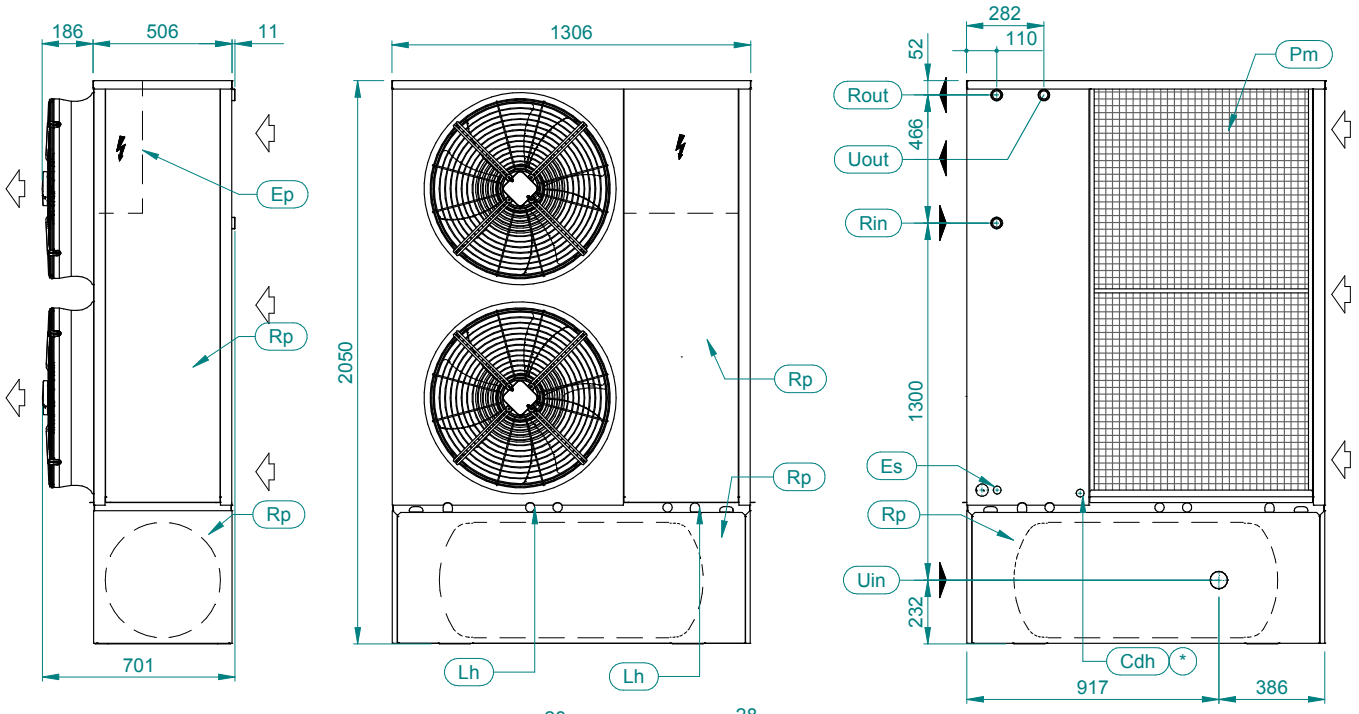

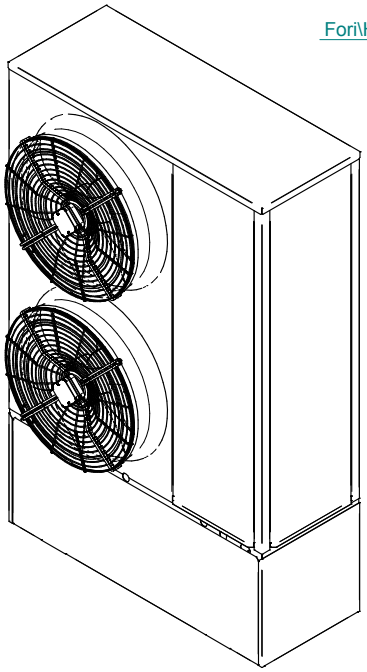

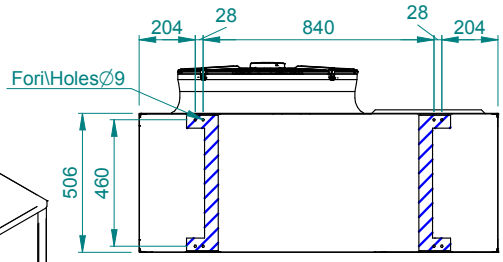

IMPRONTA A TERRA / FOOTPRINT

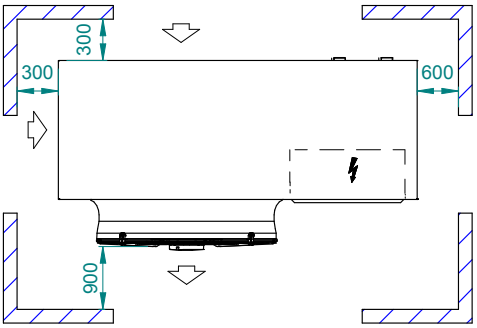

SPAZI DI INSTALLAZIONE / CLEARANCES

MODELLO MODEL	PESO WEIGHT (kg)	PESO IN FUNZIONE OPERATING WEIGHT (kg)
29	448	578
34	458	588
38	479	609
42	490	620

DIMENSIONI - DIMENSIONS		
LUNGHEZZA WIDTH	PROFONDITA' DEPTH	ALTEZZA HEIGHT
1306	701	2050

Ep	QUADRO ELETTRICO / ELECTRICAL PANEL	
Es	INGRESSO ALIMENTAZIONE ELETTRICA / ELECTRICAL SUPPLY INLET	
Lh	FORI SOLLEVAMENTO / LIFTING HOLES	Ø34
Rp	PANNELLO ASPORTABILE / REMOVABLE PANEL	
Pm	GRIGLIE DI PROTEZIONE / PROTECTIVE METAL MESH	
Cdh	SCARICO CONDENSA / CONDENSATE DRAIN	ø 22

Uin	INGRESSO ACQUA UTILIZZO / USER WATER INLET	1" 1/4 BSPM
Uout	USCITA ACQUA UTILIZZO / USER WATER OUTLET	1" 1/4 BSPM
Rin	INGRESSO ACQUA RECUPERO / RECOVERY WATER INLET	1" 1/4 BSPM
Rout	USCITA ACQUA RECUPERO / RECOVERY WATER OUTLET	1" 1/4 BSPM
⇦	FLUSSO ARIA / AIR FLOW	

(*) OPZIONALE / OPTIONAL

GEYSER 2 MT Dimensional layout
52-62-72-82-92

SD00252 - B

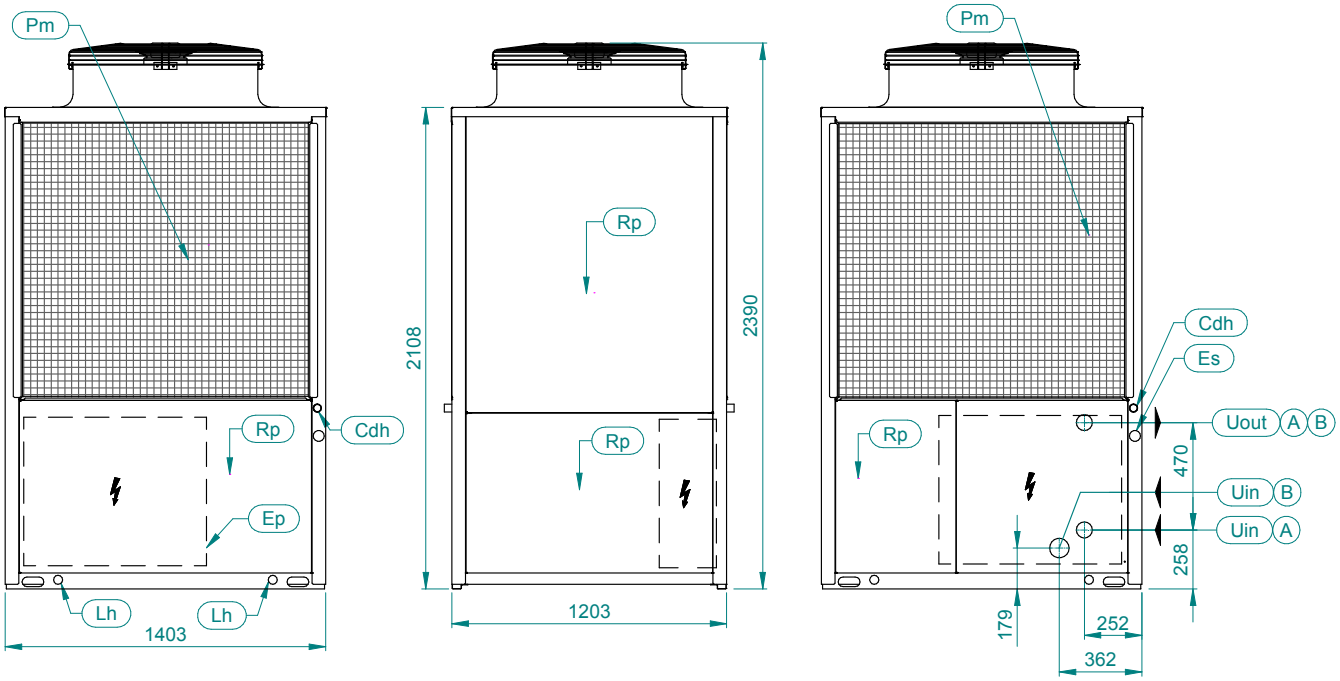

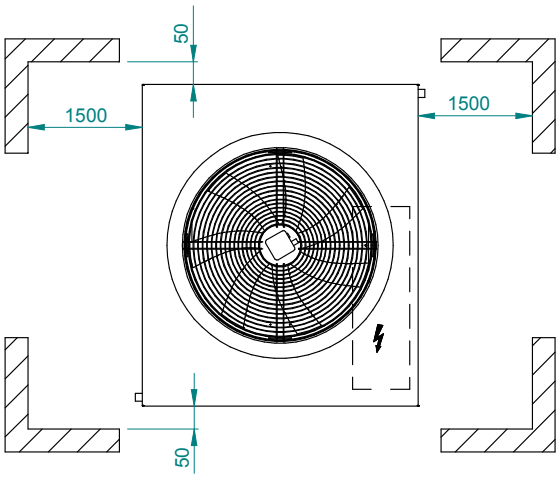

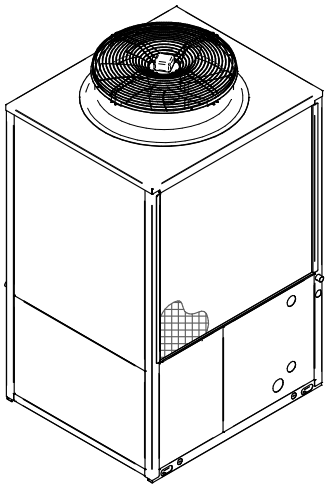

SPAZI DI INSTALLAZIONE / CLEARANCES

Ep	QUADRO ELETTRICO	ELECTRICAL PANEL
Es	INGRESSO ALIMENTAZIONE ELETTRICA	ELECTRICAL SUPPLY INLET
Lh	FORI DI SOLLEVAMENTO	LIFTING HOLES
Pm	GRIGLIE DI PROTEZIONE	PROTECTIVE METAL MESH

Rp	PANNELLO ASPORTABILE	REMOVABLE PANEL
Cdh	SCARICO CONDENSA	CONDENSATE DRAIN	ø35
Uin	INGRESSO ACQUA UTILIZZO	USER WATER INLET	1"1/2 BSPM (A) 2" BSPM (B)
Uout	USCITA ACQUA UTILIZZO	USER WATER OUTLET	1"1/2 BSPM

CONNESSIONI IDRAULICHE / HYDRAULIC CONNECTION

(A) ACQUA UTILIZZO SENZA MODULO IDRAULICO
USER WATER WITHOUT HYDRAULIC MODULE

(B) ACQUA UTILIZZO CON MODULO IDRAULICO 1P-2P
USER WATER WITH HYDRAULIC MODULE 1P-2P

DIMENSIONI / DIMENSIONS		
LUNGHEZZA WIDTH	PROFONDITA' DEPTH	ALTEZZA HEIGHT
1403	1203	2390

GEYSER 2 MT Dimensional layout
52-62-72-82-92

SD00252 - B

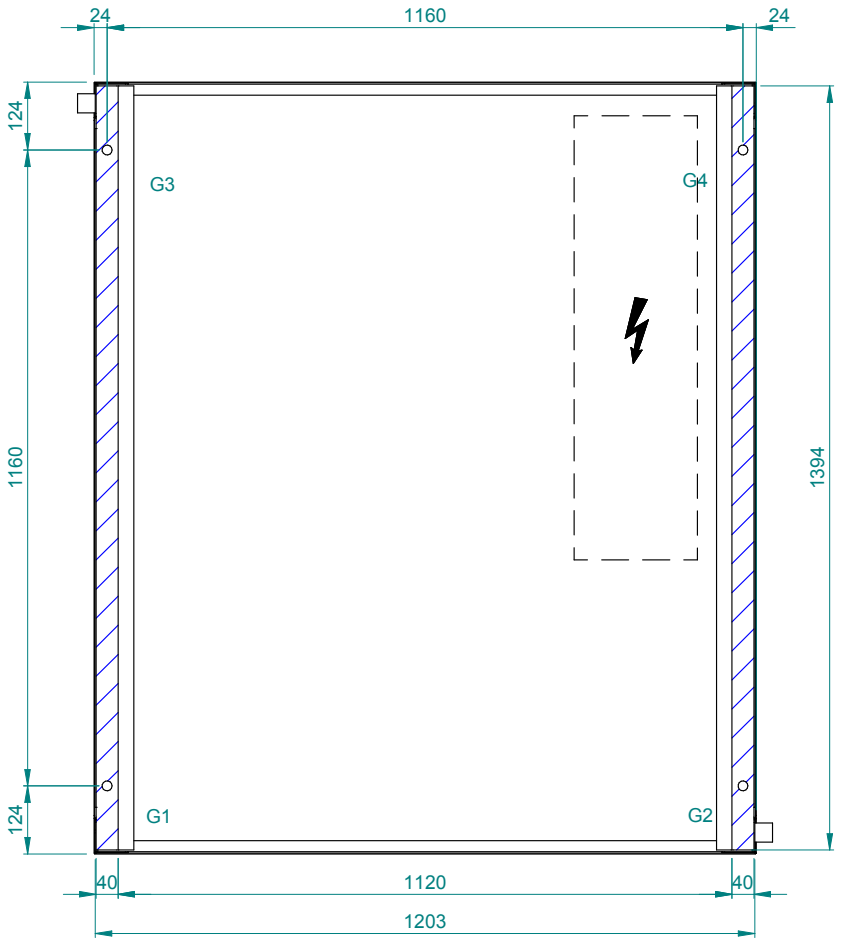

IMPRONTA A TERRA \ FOOTPRINT

Fh	FORI DI FISSAGGIO FIXING HOLES	Ø18
G..	PUNTI DI APPOGGIO ANTIVIBRANTI VIBRATION DAMPER FOOT HOLDS	

	MODELLO MODEL	PESO WEIGHT (kg)	PESO IN FUNZIONE OPERATING WEIGHT (kg)
	52	580	583
	62	597	600
	72	607	610
	82	625	628
	92	636	639
Δ PESO Δ WEIGHT	MOD. 1P	16	18
Δ PESO Δ WEIGHT	MOD. 2P	32	34

	G1 (kg)	G2 (kg)	G3 (kg)	G4 (kg)
52	157	162	153	111
62	162	167	158	114
72	164	169	160	116
82	169	174	165	119
92	172	178	168	121
52 1P	159	164	160	118
62 1P	164	169	165	121
72 1P	166	171	167	123
82 1P	171	176	172	126
92 1P	174	180	175	128
52 2P	165	170	168	126
62 2P	170	175	173	129
72 2P	172	177	175	131
82 2P	177	182	180	134
92 2P	180	186	183	136

GEYSER 2 MT/HWS Dimensional layout

SD00250 - B

52-62-72-82-92

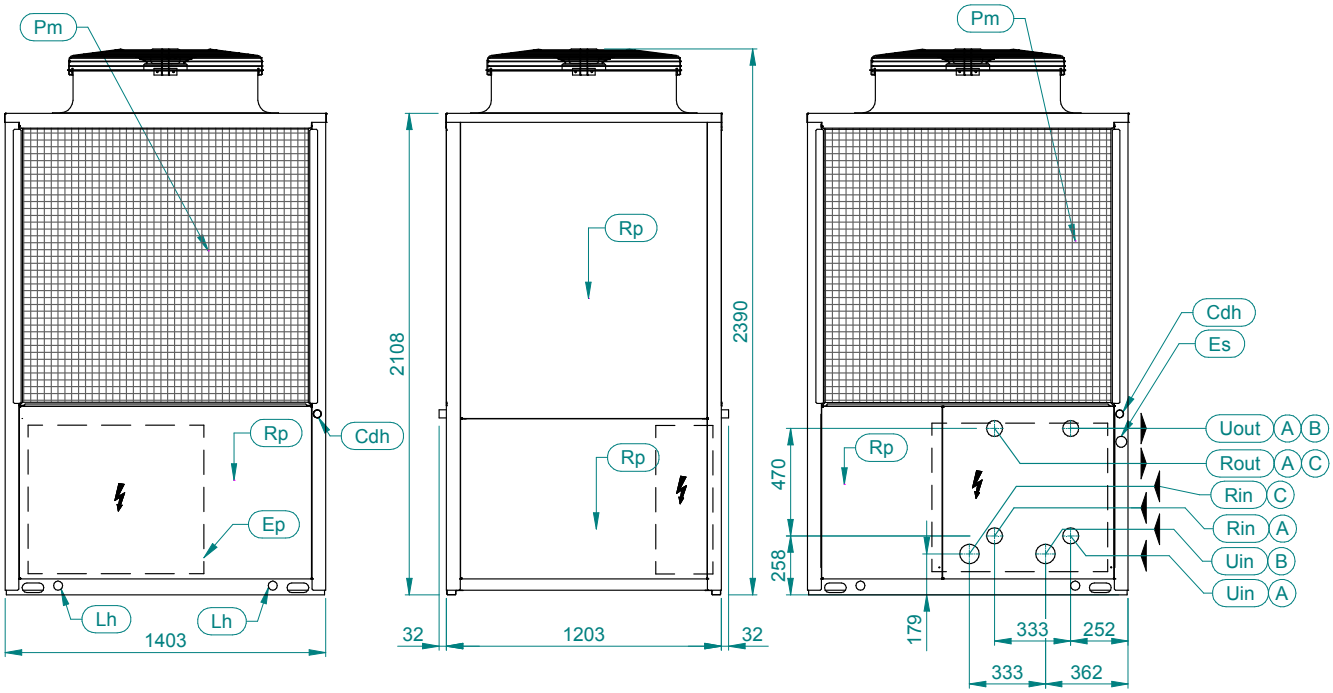

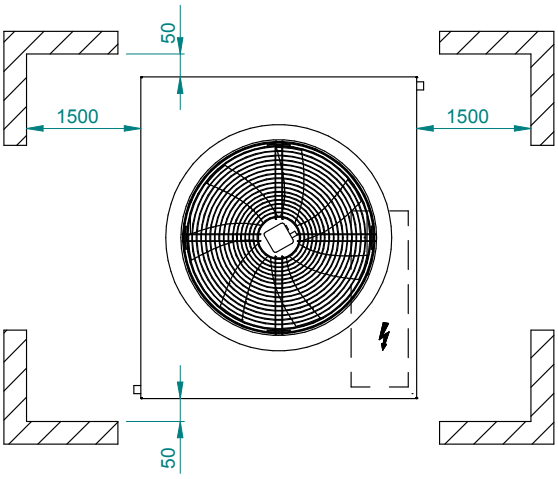

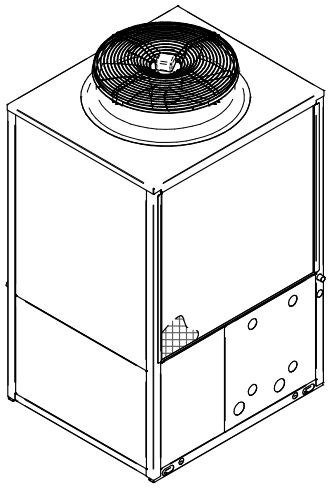

SPAZI DI INSTALLAZIONE / CLEARANCES

Ep	QUADRO ELETTRICO ELECTRICAL PANEL
Es	INGRESSO ALIMENTAZIONE ELETTRICA ELECTRICAL SUPPLY INLET
Lh	FORI DI SOLLEVAMENTO LIFTING HOLES
Pm	GRIGLIE DI PROTEZIONE PROTECTIVE METAL MESH
Rp	PANNELLO ASPORTABILE REMOVABLE PANEL

Cdh	SCARICO CONDENSA VERSIONE HP CONDENSATE DRAIN HP VERSION	ø35
Uin	INGRESSO ACQUA UTILIZZO USER WATER INLET	1" 1/2 BSPM (A) 2" BSPM (B)
Uout	USCITA ACQUA UTILIZZO USER WATER OUTLET	1" 1/2 BSPM
Rin	INGRESSO ACQUA RECUPERO RECOVERY WATER INLET	1" 1/2 BSPM (A) 2" BSPM (C)
Rout	USCITA ACQUA RECUPERO RECOVERY WATER OUTLET	1" 1/2 BSPM

CONNESSIONI IDRAULICHE / HYDRAULIC CONNECTION

(A) ACQUA UTILIZZO\RECUPERO SENZA MODULO IDRAULICO
USER\RECOVERY WATER WITHOUT HYDRAULIC MODULE

(B) ACQUA UTILIZZO CON MODULO IDRAULICO 1P-2P
USER WATER WITH HYDRAULIC MODULE 1P-2P

(C) ACQUA RECUPERO CON MODULO IDRAULICO 1R
RECOVERY WATER WITH HYDRAULIC MODULE 1R

DIMENSIONI / DIMENSIONS		
LUNGHEZZA WIDTH	PROFONDITA' DEPTH	ALTEZZA HEIGHT
1403	1203	2390

GEYSER 2 MT/HWS Dimensional layout
52-62-72-82-92

SD00250 - B

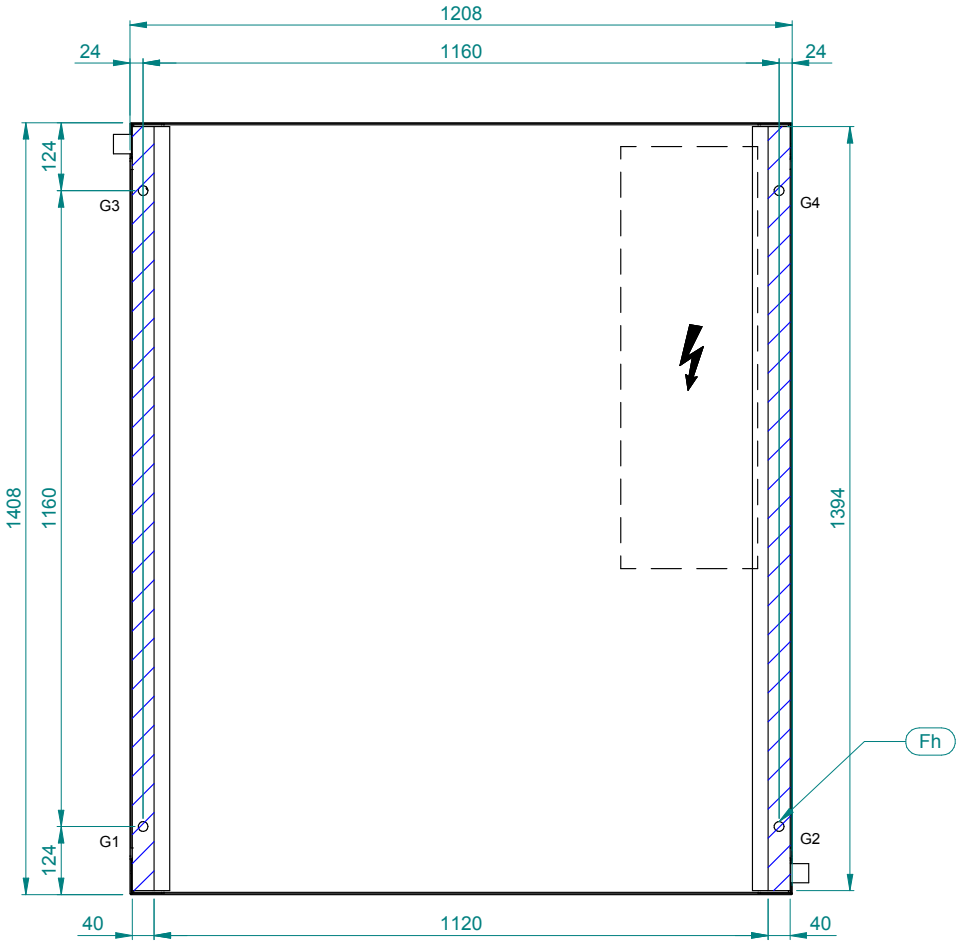

IMPRONTA A TERRA \ FOOTPRINT

Fh	FORI DI FISSAGGIO FIXING HOLES	Ø18

G..	PUNTI DI APPOGGIO ANTIVIBRANTI VIBRATION DAMPER FOOT HOLDS

	MODELLO MODEL	PESO WEIGHT (kg)	PESO IN FUNZIONE OPERATING WEIGHT (kg)
	52	595	598
	62	612	615
	72	622	625
	82	640	643
	92	651	654
Δ PESO Δ WEIGHT	MOD. 1P	16	18
Δ PESO Δ WEIGHT	MOD. 2P	32	32
Δ PESO Δ WEIGHT	MOD. 1R	17	19

MODELLO MODEL	G1 (kg)	G2 (kg)	G3 (kg)	G4 (kg)
52	156	162	150	110
62	161	167	155	113
72	163	169	157	115
82	168	174	162	118
92	171	178	165	120
52 1P	158	164	157	117
62 1P	163	169	162	120
72 1P	165	171	164	122
82 1P	170	176	169	125
92 1P	173	180	172	127
52 2P	164	170	165	125
62 2P	169	175	170	128
72 2P	171	177	172	130
82 2P	176	182	177	133
92 2P	179	186	180	135

GEYSER 2 MT HAD Dimensional layout

SD00254 - C

52-62-72-82-92

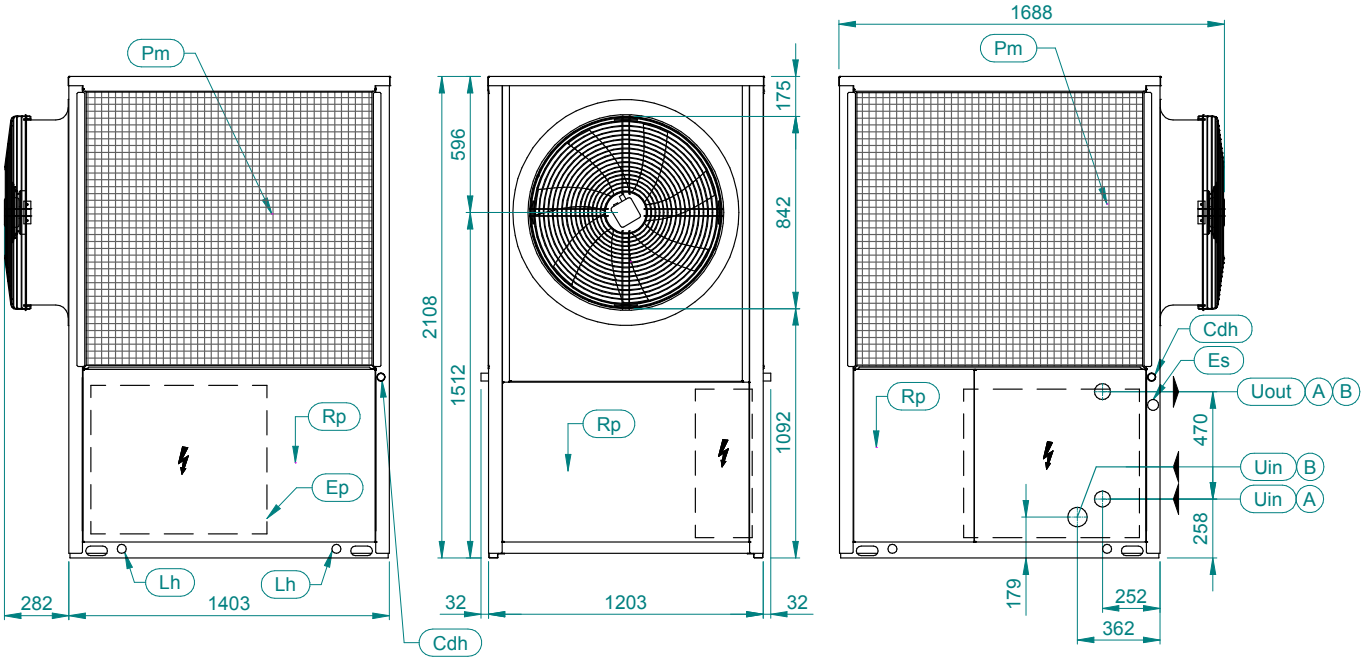

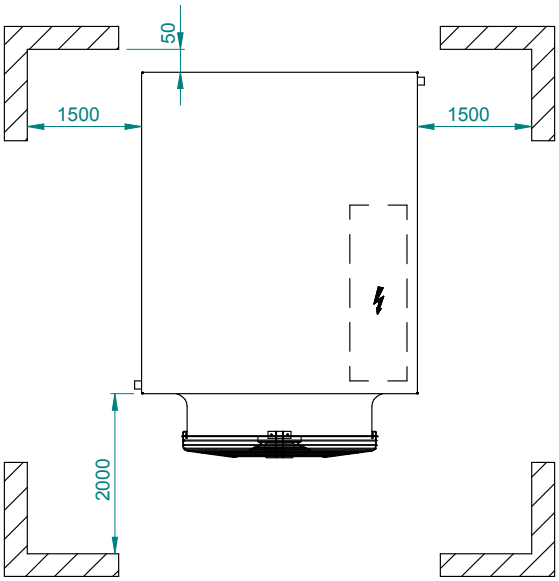

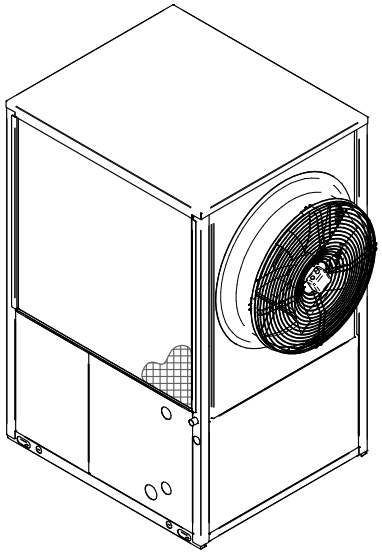

SPAZI DI INSTALLAZIONE / CLEARANCES

Ep	QUADRO ELETTRICO	ELECTRICAL PANEL
Es	INGRESSO ALIMENTAZIONE ELETTRICA	ELECTRICAL SUPPLY INLET
Lh	FORI DI SOLLEVAMENTO	LIFTING HOLES
Pm	GRIGLIE DI PROTEZIONE	PROTECTIVE METAL MESH

Rp	PANNELLO ASPORTABILE	REMOVABLE PANEL
Cdh	SCARICO CONDENSA	CONDENSATE DRAIN
Uin	INGRESSO ACQUA UTILIZZO	USER WATER INLET
Uout	USCITA ACQUA UTILIZZO	USER WATER OUTLET

ø35	
1" 1/2 BSPM (A)	2" BSPM (B)
1" 1/2 BSPM	

CONNESSIONI IDRAULICHE / HYDRAULIC CONNECTION

(A) ACQUA UTILIZZO SENZA MODULO IDRAULICO
USER WATER WITHOUT HYDRAULIC MODULE

(B) ACQUA UTILIZZO CON MODULO IDRAULICO 1P-2P
USER WATER WITH HYDRAULIC MODULE 1P-2P

DIMENSIONI / DIMENSIONS		
LUNGHEZZA WIDTH	PROFONDITA' DEPTH	ALTEZZA HEIGHT
1685	1203	2108

GEYSER 2 MT HAD Dimensional layout
52-62-72-82-92

SD00254 - C

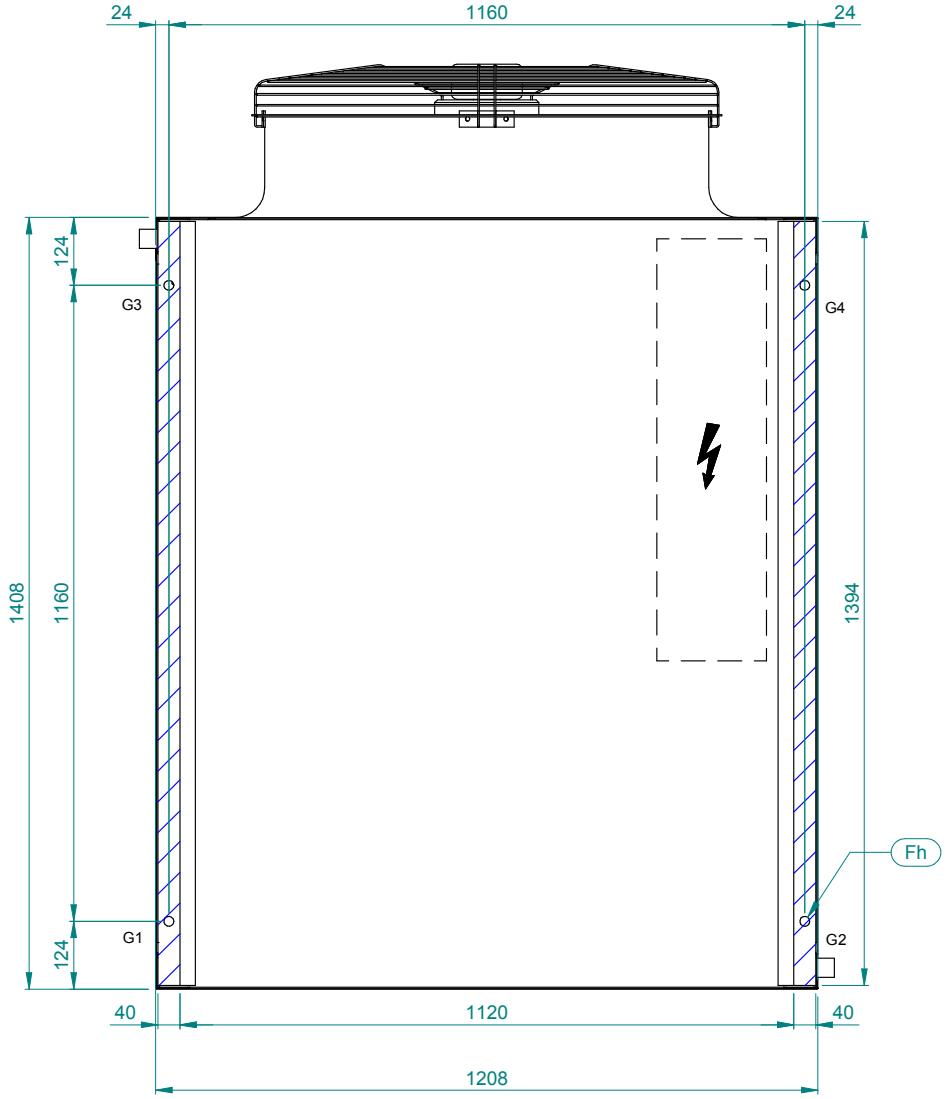

IMPRONTA A TERRA \ FOOTPRINT

	MODELLO MODEL	PESO WEIGHT (kg)	PESO IN FUNZIONE OPERATING WEIGHT (kg)
	52	580	583
	62	602	605
	72	607	610
	82	625	628
	92	636	639
Δ PESO Δ WEIGHT	MOD. 1P	16	18
Δ PESO Δ WEIGHT	MOD. 2P	32	34

Fh	FORI DI FISSAGGIO FIXING HOLES	Ø18

G..	PUNTI DI APPOGGIO ANTIVIBRANTI VIBRATION DAMPER FOOT HOLDS

	G1 (kg)	G2 (kg)	G3 (kg)	G4 (kg)
52	152	157	158	116
62	157	162	163	119
72	158	164	165	119
82	164	169	160	124
92	167	173	163	126
52 1P	154	159	165	123
62 1P	159	164	170	126
72 1P	160	166	172	126
82 1P	166	171	167	131
92 1P	169	175	170	133
52 2P	160	165	173	131
62 2P	165	170	178	134
72 2P	166	172	180	134
82 2P	172	177	175	139
92 2P	175	181	178	141

GEYSER 2 MT/HWS HAD Dimensional layout
52-62-72-82-92

SD00256 - C

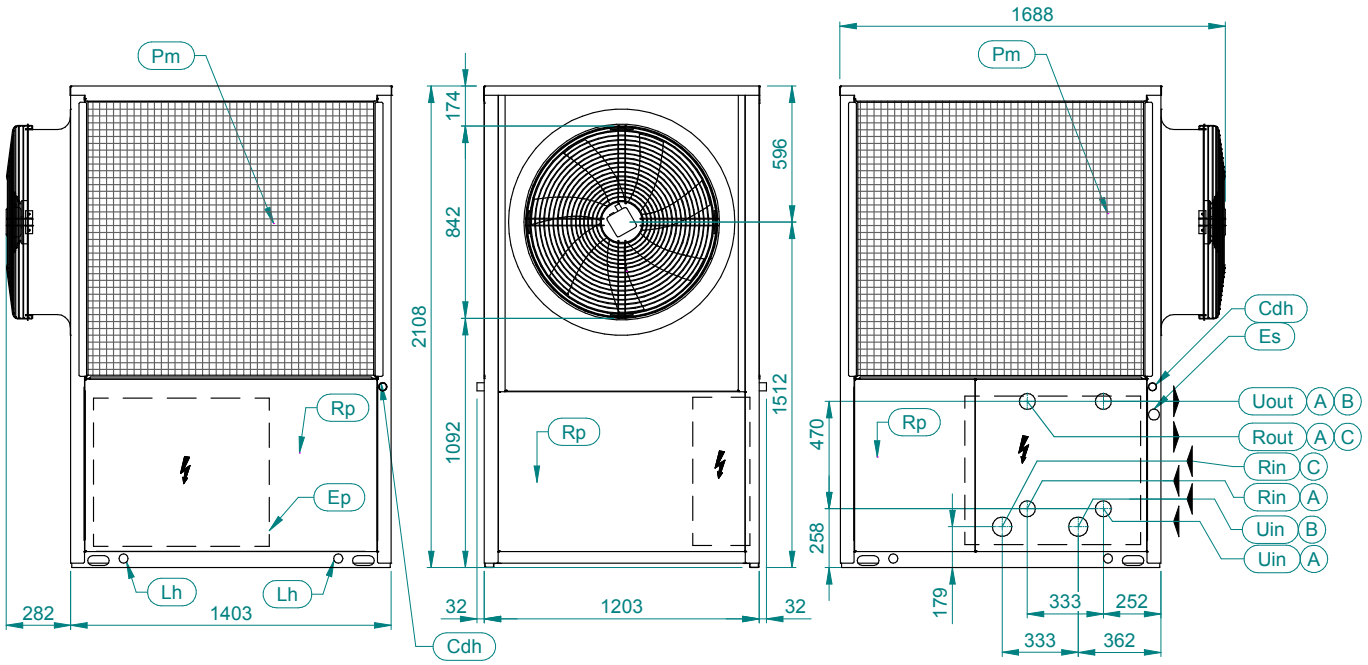

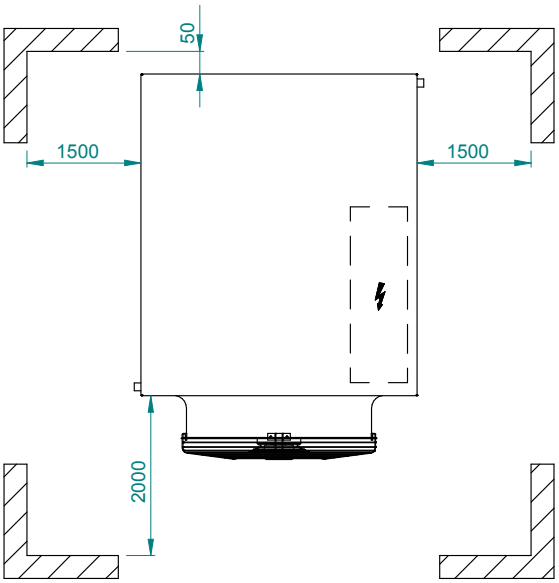

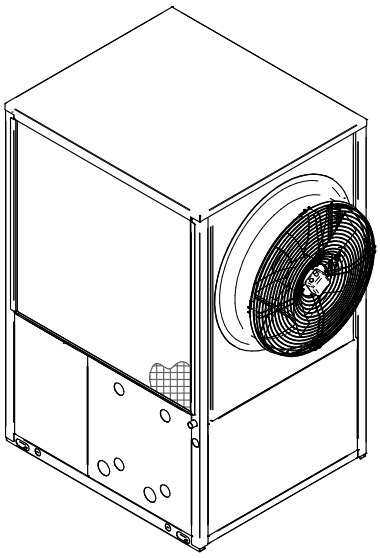

SPAZI DI INSTALLAZIONE / CLEARANCES

Ep	QUADRO ELETTRICO ELECTRICAL PANEL		Cdh	SCARICO CONDENSA VERSIONE HP CONDENSATE DRAIN HP VERSION	ø35
Es	INGRESSO ALIMENTAZIONE ELETTRICA ELECTRICAL SUPPLY INLET		Uin	INGRESSO ACQUA UTILIZZO USER WATER INLET	1" 1/2 BSPM (A) 2" BSPM (B)
Lh	FORI DI SOLLEVAMENTO LIFTING HOLES		Uout	USCITA ACQUA UTILIZZO USER WATER OUTLET	1" 1/2 BSPM
Pm	GRIGLIE DI PROTEZIONE PROTECTIVE METAL MESH		Rin	INGRESSO ACQUA RECUPERO RECOVERY WATER INLET	1" 1/2 BSPM (A) 2" BSPM (C)
Rp	PANNELLO ASPORTABILE REMOVABLE PANEL		Rout	USCITA ACQUA RECUPERO RECOVERY WATER OUTLET	1" 1/2 BSPM

CONNESSIONI IDRAULICHE / HYDRAULIC CONNECTION

- (A) ACQUA UTILIZZO\RECUPERO SENZA MODULO IDRAULICO
  USER\RECOVERY WATER WITHOUT HYDRAULIC MODULE
- (B) ACQUA UTILIZZO CON MODULO IDRAULICO 1P-2P
  USER WATER WITH HYDRAULIC MODULE 1P-2P
- (C) ACQUA RECUPERO CON MODULO IDRAULICO 1R
  RECOVERY WATER WITH HYDRAULIC MODULE 1R

DIMENSIONI / DIMENSIONS		
LUNGHEZZA WIDTH	PROFONDITA' DEPTH	ALTEZZA HEIGHT
1685	1203	2108

GEYSER 2 MT/HWS HAD Dimensional layout
52-62-72-82-92

SD00256 - C

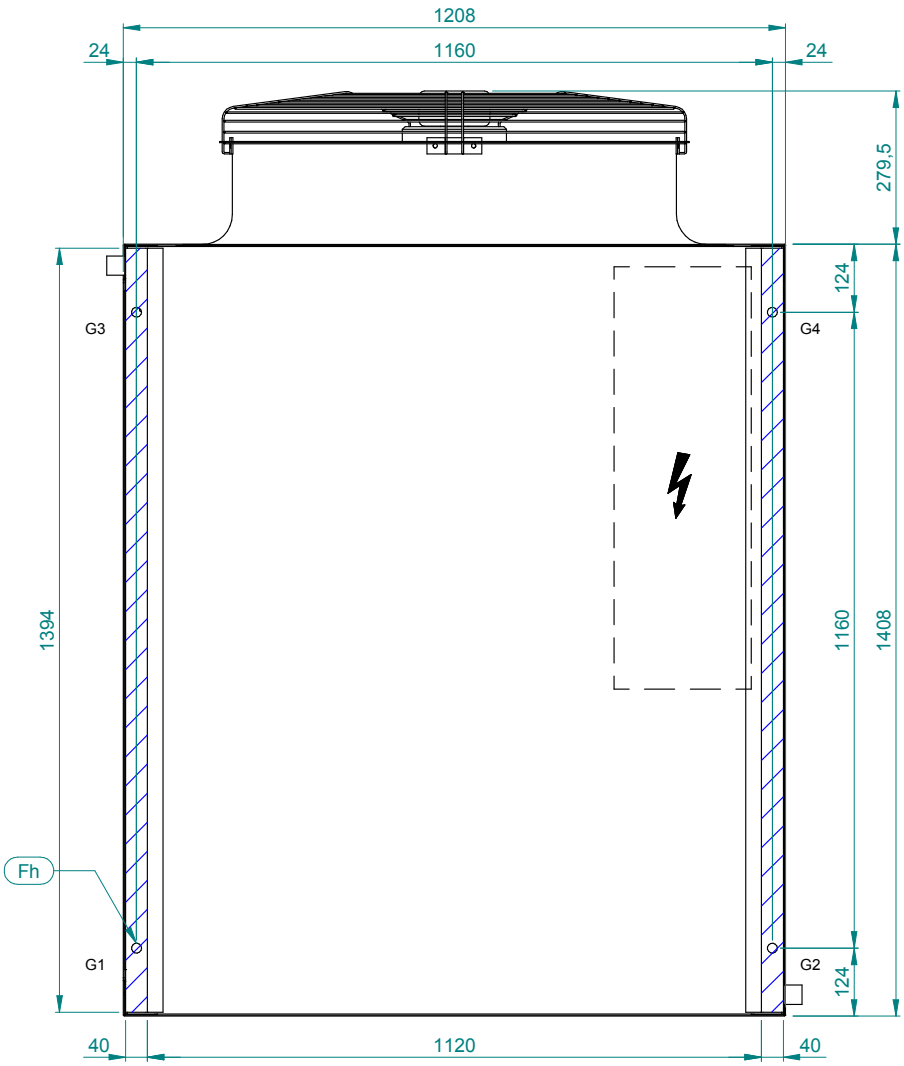

IMPRONTA A TERRA \ FOOTPRINT

	MODELLO MODEL	PESO WEIGHT (kg)	PESO IN FUNZIONE OPERATING WEIGHT (kg)
	52	595	598
	62	612	615
	72	622	625
	82	640	643
	92	651	654
Δ PESO Δ WEIGHT	MOD. 1P	16	18
Δ PESO Δ WEIGHT	MOD. 2P	32	34
Δ PESO Δ WEIGHT	MOD. 1R	17	19

MODELLO MODEL	G1 (kg)	G2 (kg)	G3 (kg)	G4 (kg)
52	144	142	180	132
62	149	147	185	135
72	151	149	187	137
82	156	154	192	140
92	159	158	195	142
52 1P	146	144	187	139
62 1P	151	149	192	142
72 1P	153	151	194	144
82 1P	158	156	199	147
92 1P	161	160	202	149
52 2P	152	150	195	147
62 2P	157	155	200	150
72 2P	159	157	202	152
82 2P	164	162	207	155
92 2P	167	166	210	157

Fh	FORI DI FISSAGGIO FIXING HOLES	Ø18

G..	PUNTI DI APPOGGIO ANTIVIBRANTI VIBRATION DAMPER FOOT HOLDS

GEYSER 2 HT DIMENSIONAL LAYOUTS

GEYSER 2 HT Dimensional layout

SD00329 - A

7-9-11-13-17

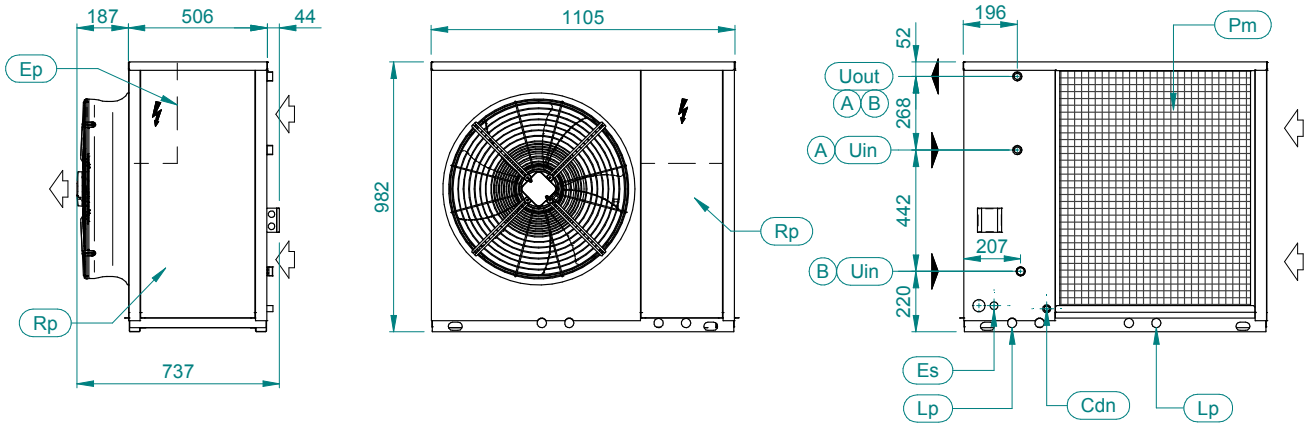

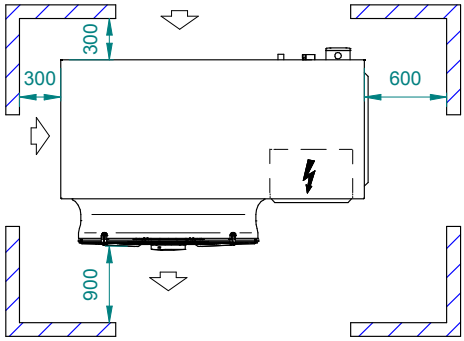

SPAZI DI INSTALLAZIONE / CLEARANCES

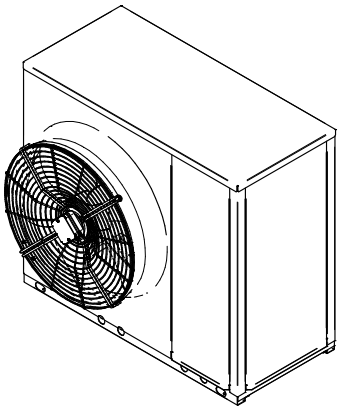

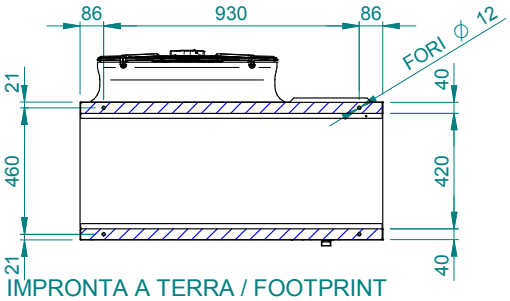

IMPRONTA A TERRA / FOOTPRINT

DIMENSIONI - DIMENSIONS		
LUNGHEZZA WIDTH	PROFONDITA' DEPTH	ALTEZZA HEIGHT
1105	737	982

MODELLO MODEL	PESO WEIGHT (kg)	PESO IN FUNZIONE OPERATING WEIGHT (kg)
7	107	108
9	111	112
11	117	118
13	123	124
17	132	133
7 1P	116	117
9 1P	120	121
11 1P	126	127
13 1P	132	133
17 1P	141	142

CONNESSIONI IDRAULICHE / HYDRAULIC CONNECTION

(A) ACQUA UTILIZZO SENZA MODULO IDRAULICO
USER WATER WITHOUT HYDRAULIC MODULE

(B) ACQUA UTILIZZO CON MODULO IDRAULICO 1P
USER WATER WITH HYDRAULIC MODULE 1P

Ep	QUADRO ELETTRICO / ELECTRICAL PANEL	Cdh	SCARICO CONDENSA / CONDENSATE DRAIN	ø 22
Es	INGRESSO ALIMENTAZIONE ELETTRICA / ELECTRICAL SUPPLY INLET	Uin	INGRESSO ACQUA UTILIZZO / USER WATER INLET	1" BSPM
Rp	PANNELLO ASPORTABILE / REMOVABLE PANEL	Uout	USCITA ACQUA UTILIZZO / USER WATER OUTLET	1" BSPM
Pm	GRIGLIE DI PROTEZIONE / PROTECTIVE METAL MESH	⇦	FLUSSO ARIA / AIR FLOW	
Lp	PUNTO DI SOLLEVAMENTO / LIFTING POINT			

GEYSER 2 HT 1PS Dimensional layout

SD00330 - A

7-9-11-13-17

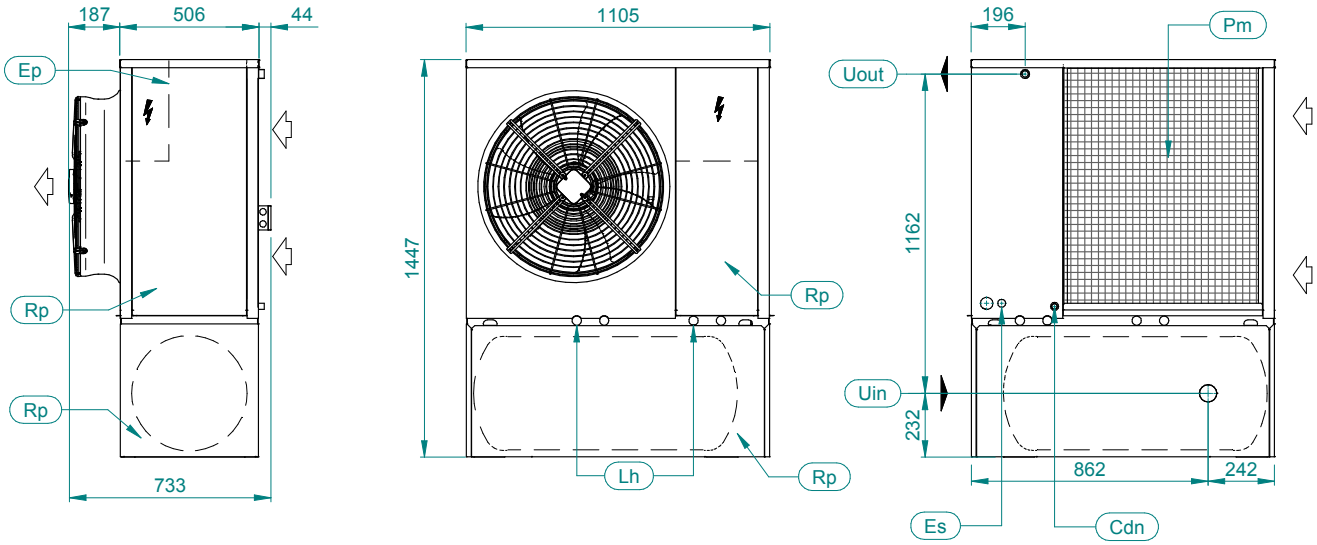

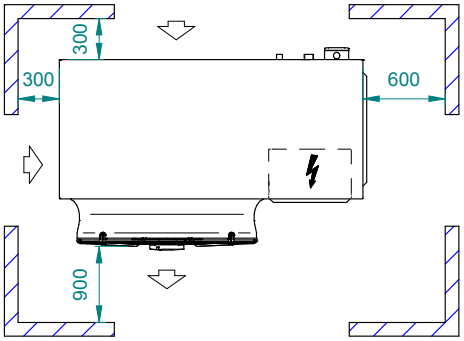

SPAZI DI INSTALLAZIONE / CLEARANCES

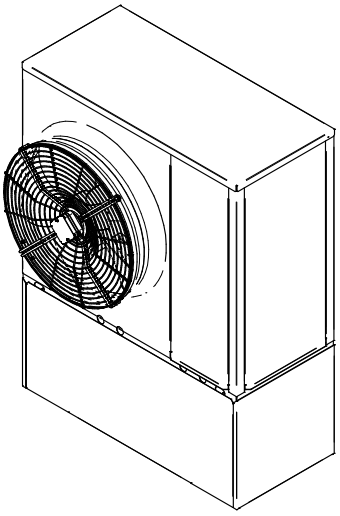

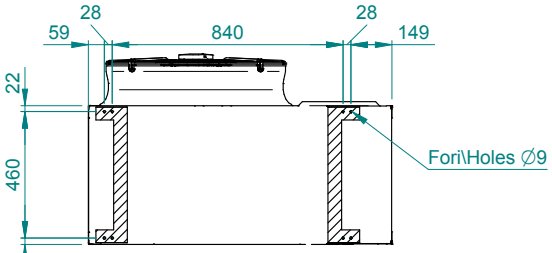

IMPRONTA A TERRA / FOOTPRINT

Ep	QUADRO ELETTRICO ELECTRICAL PANEL	
Es	INGRESSO ALIMENTAZIONE ELETTRICA ELECTRICAL SUPPLY INLET	
Lh	FORI SOLLEVAMENTO LIFTING HOLES	Ø35
Rp	PANNELLO ASPORTABILE REMOVABLE PANEL	
Pm	GRIGLIE DI PROTEZIONE PROTECTIVE METAL MESH	

Cdh	SCARICO CONDENSA CONDENSATE DRAIN	ø 22
Uin	INGRESSO ACQUA UTILIZZO USER WATER INLET	1" 1/4 BSPM
Uout	USCITA ACQUA UTILIZZO USER WATER OUTLET	1" BSPM
⇦	FLUSSO ARIA AIR FLOW	

DIMENSIONI - DIMENSIONS		
LUNGHEZZA WIDTH	PROFONDITA' DEPTH	ALTEZZA HEIGHT
1105	733	1447

MODELLO MODEL	PESO WEIGHT (kg)	PESO IN FUNZIONE OPERATING WEIGHT (kg)
7	181	311
9	185	315
11	191	321
13	197	327
17	206	336

GEYSER 2 HT Dimensional layout
22-26

SD00367 - A

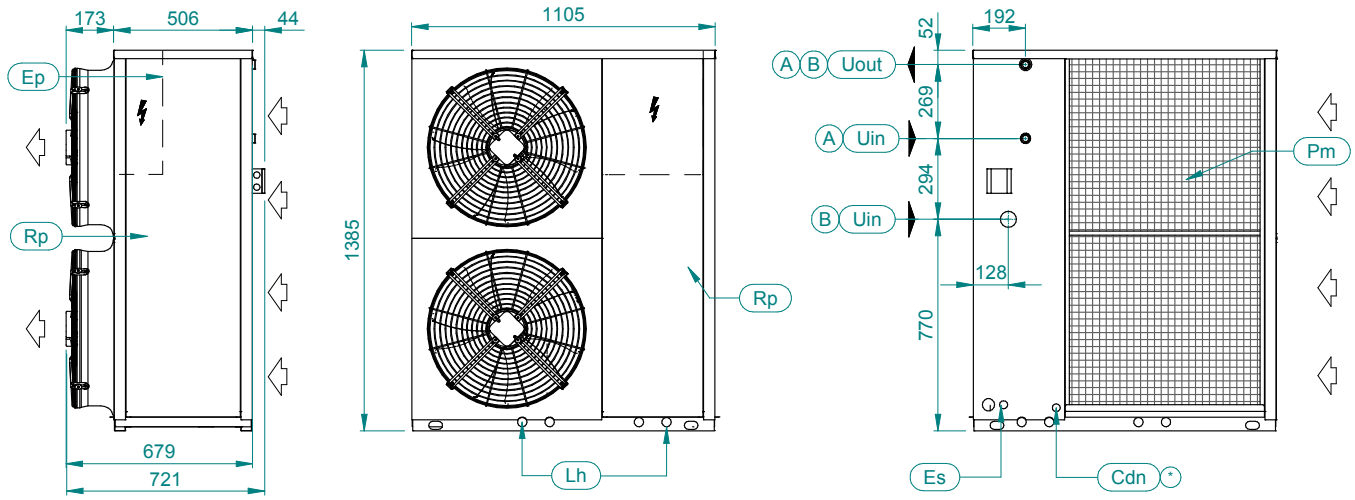

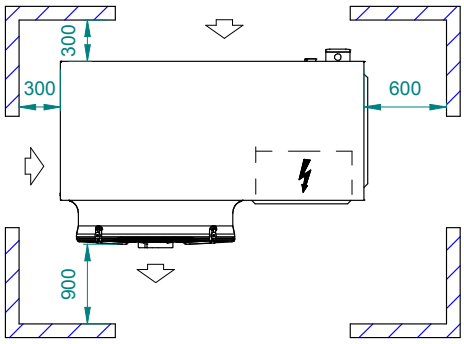

SPAZI DI INSTALLAZIONE / CLEARANCES

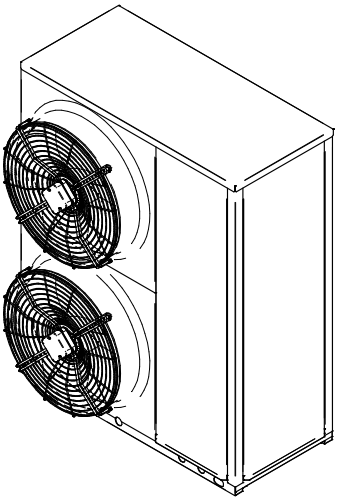

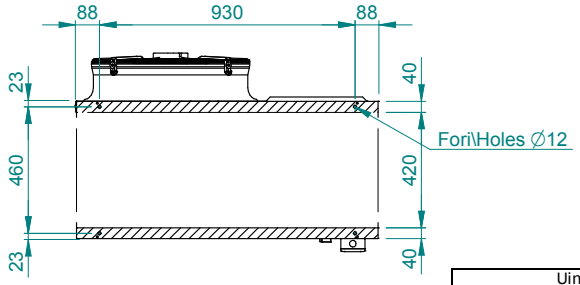

IMPRONTA A TERRA / FOOTPRINT

CONNESSIONI IDRAULICHE / HYDRAULIC CONNECTION

(A) ACQUA UTILIZZO SENZA MODULO IDRAULICO
USER WATER WITHOUT HYDRAULIC MODULE

(B) ACQUA UTILIZZO CON MODULO IDRAULICO 1P
USER WATER WITH HYDRAULIC MODULE 1P

Uin		Uout
(A) 1" BSPM	(B) 1 1\4" BSPM	(A) (B) 1" BSPM

DIMENSIONI - DIMENSIONS		
LUNGHEZZA WIDTH	PROFONDITA' DEPTH	ALTEZZA HEIGHT
1105	721	1385

MODELLO MODEL	PESO WEIGHT (kg)	PESO IN FUNZIONE OPERATING WEIGHT (kg)
22	230	231
26	249	250
22 1P	242	243
26 1P	261	262

Ep	QUADRO ELETTRICO / ELECTRICAL PANEL	
Es	INGRESSO ALIMENTAZIONE ELETTRICA / ELECTRICAL SUPPLY INLET	
Lh	FORI SOLLEVAMENTO / LIFTING HOLES	Ø34
Rp	PANNELLO ASPORTABILE / REMOVABLE PANEL	
Pm	GRIGLIE DI PROTEZIONE / PROTECTIVE METAL MESH	

Cdh	SCARICO CONDENSA / CONDENSATE DRAIN	ø 18
Uin	INGRESSO ACQUA UTILIZZO / USER WATER INLET	
Uout	USCITA ACQUA UTILIZZO / USER WATER OUTLET	
⇦	FLUSSO ARIA / AIR FLOW	

(*) OPZIONALE \ OPTIONAL

GEYSER 2 HT 1PS Dimensional layout
22-26

SD00332 - A

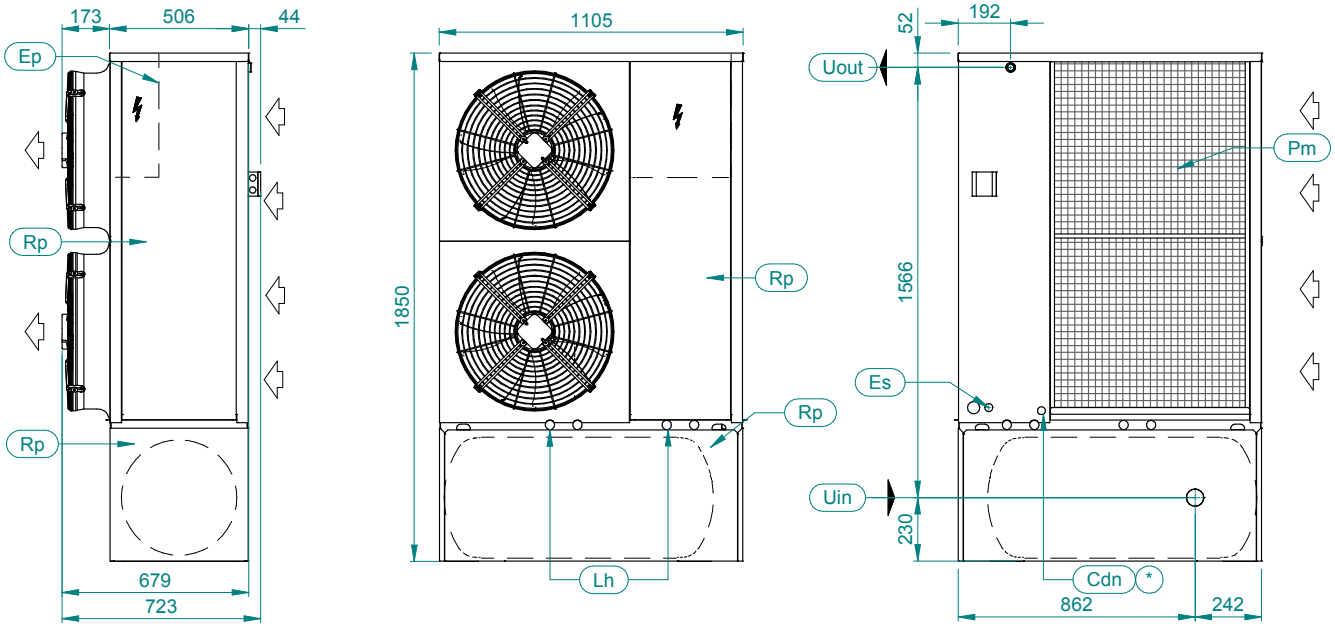

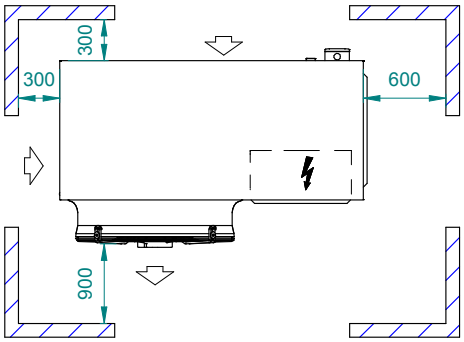

SPAZI DI INSTALLAZIONE / CLEARANCES

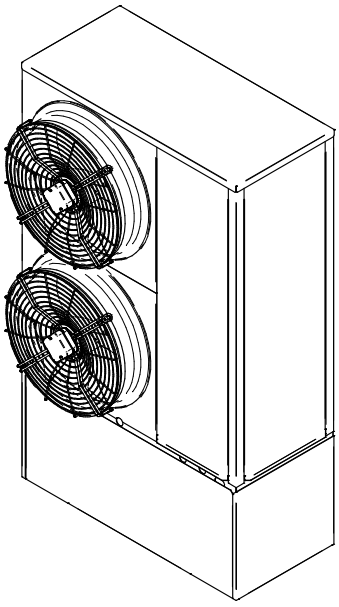

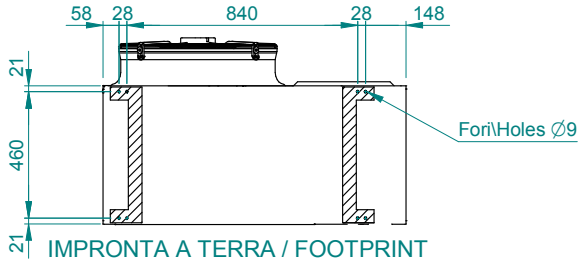

IMPRONTA A TERRA / FOOTPRINT

Ep	QUADRO ELETTRICO ELECTRICAL PANEL	
Es	INGRESSO ALIMENTAZIONE ELETTRICA ELECTRICAL SUPPLY INLET	
Lh	FORI SOLLEVAMENTO LIFTING HOLES	Ø34
Rp	PANNELLO ASPORTABILE REMOVABLE PANEL	
Pm	GRIGLIE DI PROTEZIONE PROTECTIVE METAL MESH	

Cdh	SCARICO CONDENSA CONDENSATE DRAIN	ø 22
Uin	INGRESSO ACQUA UTILIZZO USER WATER INLET	1" 1/4 BSPM
Uout	USCITA ACQUA UTILIZZO USER WATER OUTLET	1" BSPM
	FLUSSO ARIA AIR FLOW	

(*) OPZIONALE \ OPTIONAL

DIMENSIONI - DIMENSIONS		
LUNGHEZZA WIDTH	PROFONDITA' DEPTH	ALTEZZA HEIGHT
1105	723	1850

MODELLO MODEL	PESO WEIGHT (kg)	PESO IN FUNZIONE OPERATING WEIGHT (kg)
22	307	436
26	326	455

GEYSER 2 HT Dimensional layout
32-36-41

SD00333 - A

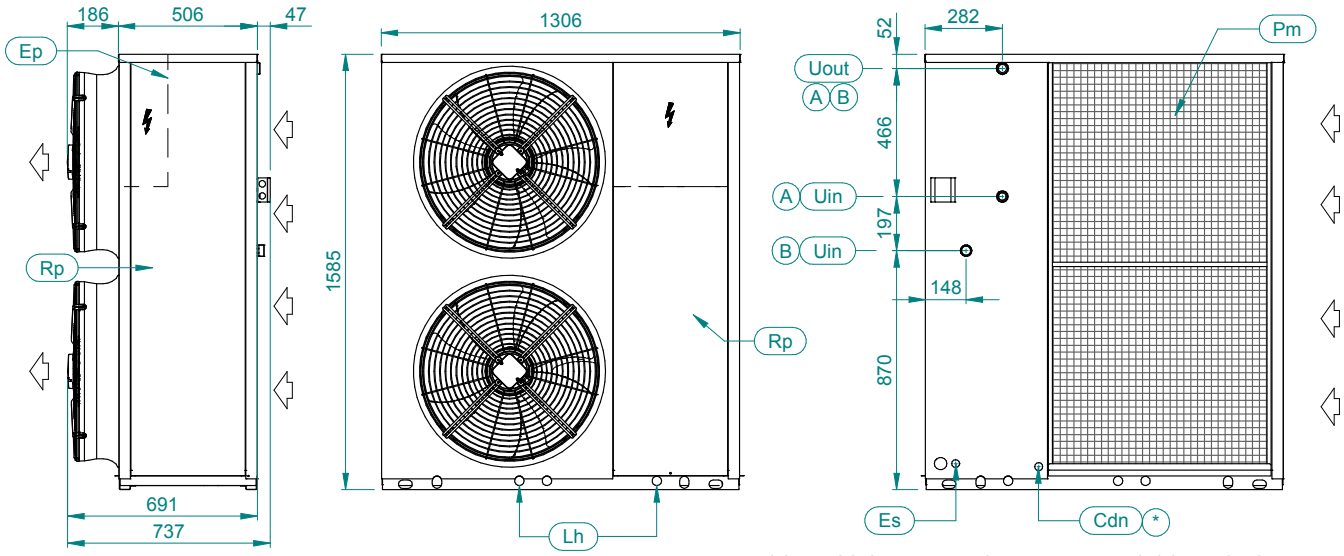

CONNESSIONI IDRAULICHE / HYDRAULIC CONNECTION

(A) ACQUA UTILIZZO SENZA MODULO IDRAULICO
USER WATER WITHOUT HYDRAULIC MODULE

(B) ACQUA UTILIZZO CON MODULO IDRAULICO 1P
USER WATER WITH HYDRAULIC MODULE 1P

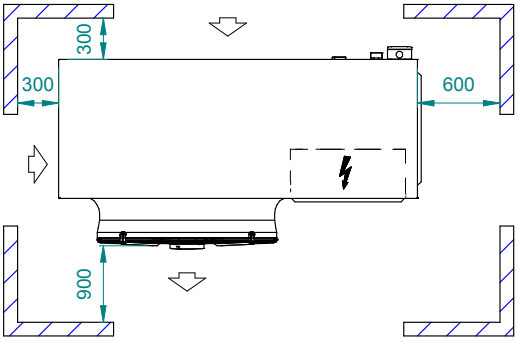

SPAZI DI INSTALLAZIONE / CLEARANCES

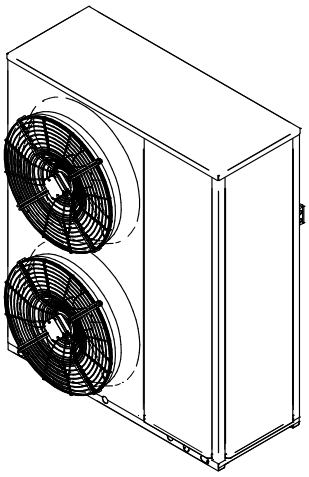

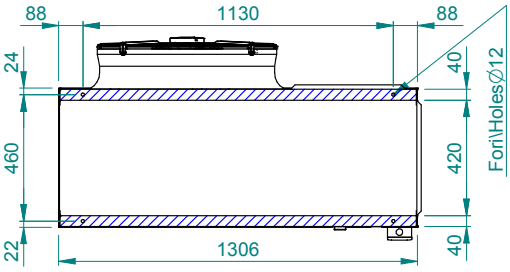

IMPRONTA A TERRA \ FOOTPRINT

DIMENSIONI - DIMENSIONS		
LUNGHEZZA WIDTH	PROFONDITA' DEPTH	ALTEZZA HEIGHT
1306	737	1585

Ep	QUADRO ELETTRICO / ELECTRICAL PANEL	
Es	INGRESSO ALIMENTAZIONE ELETTRICA / ELECTRICAL SUPPLY INLET	
Lh	FORI SOLLEVAMENTO / LIFTING HOLES	Ø34
Rp	PANNELLO ASPORTABILE / REMOVABLE PANEL	
Pm	GRIGLIE DI PROTEZIONE / PROTECTIVE METAL MESH	

Cdh	SCARICO CONDENSA / CONDENSATE DRAIN	ø 18
Uin	INGRESSO ACQUA UTILIZZO / USER WATER INLET	1" 1/4 BSPM
Uout	USCITA ACQUA UTILIZZO / USER WATER OUTLET	1" 1/4 BSPM
	FLUSSO ARIA / AIR FLOW	

(*) OPZIONALE \ OPTIONAL

MODELLO MODEL	PESO WEIGHT (kg)	PESO IN FUNZIONE OPERATING WEIGHT (kg)
32	383	385
36	402	405
41	413	416
32 1P	398	400
36 1P	417	420
41 1P	428	431

GEYSER 2 HT 1PS Dimensional layout
32-36-41

SD00334 - A

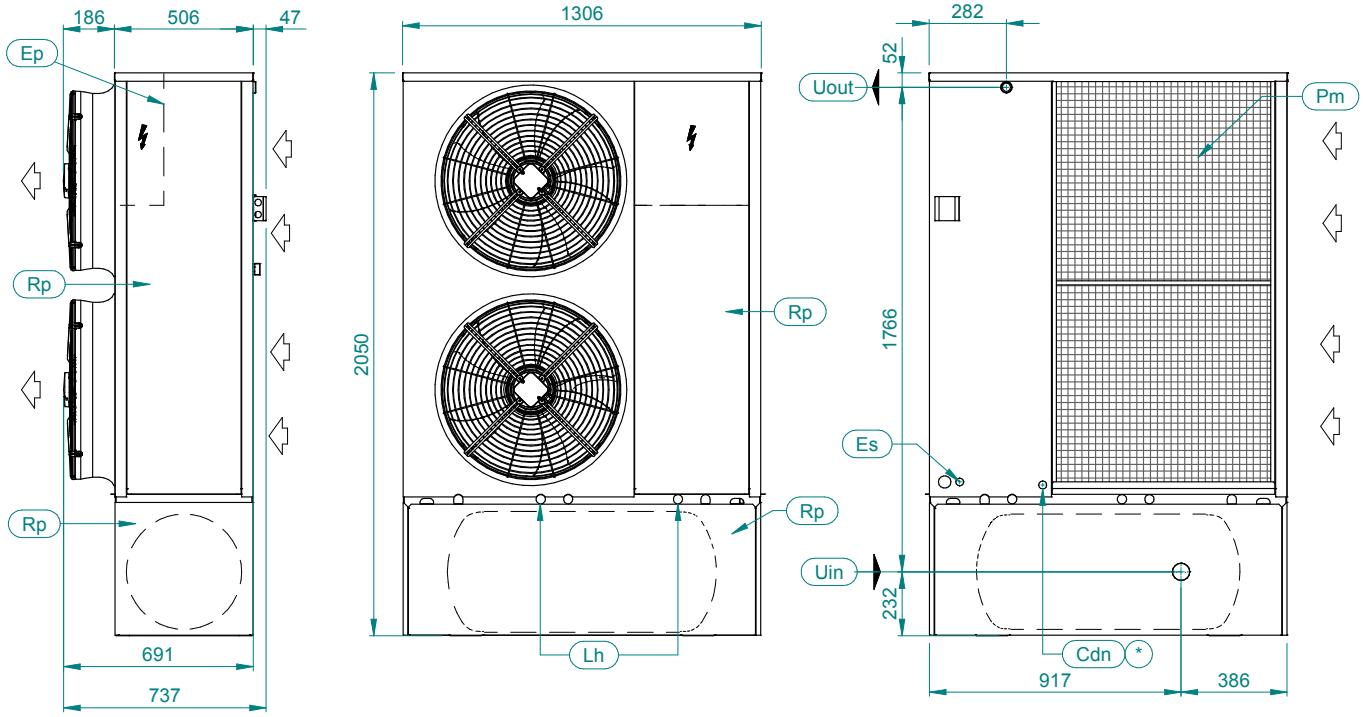

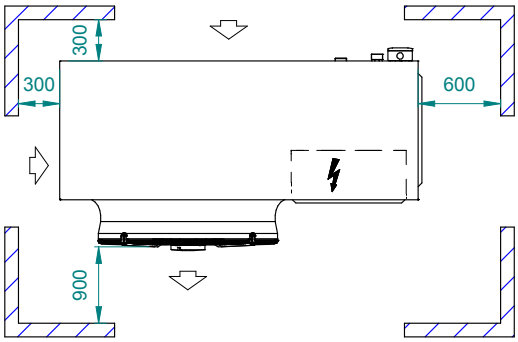

SPAZI DI INSTALLAZIONE / CLEARANCES

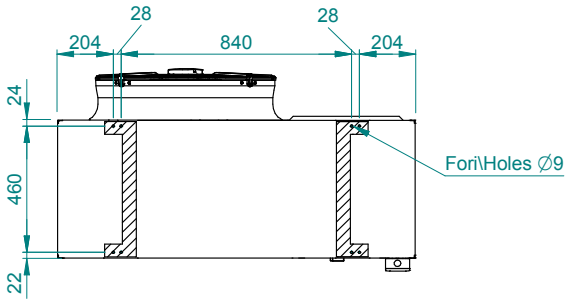

IMPRONTA A TERRA / FOOTPRINT

Ep	QUADRO ELETTRICO ELECTRICAL PANEL	
Es	INGRESSO ALIMENTAZIONE ELETTRICA ELECTRICAL SUPPLY INLET	
Lh	FORI SOLLEVAMENTO LIFTING HOLES	Ø34
Rp	PANNELLO ASPORTABILE REMOVABLE PANEL	
Pm	GRIGLIE DI PROTEZIONE PROTECTIVE METAL MESH	

Cdh	SCARICO CONDENSA CONDENSATE DRAIN	ø 22
Uin	INGRESSO ACQUA UTILIZZO USER WATER INLET	1" 1/4 BSPM
Uout	USCITA ACQUA UTILIZZO USER WATER OUTLET	1" 1/4 BSPM
	FLUSSO ARIA AIR FLOW	

(*) OPZIONALE \ OPTIONAL

DIMENSIONI - DIMENSIONS		
LUNGHEZZA WIDTH	PROFONDITA' DEPTH	ALTEZZA HEIGHT
1306	737	2050

MODELLO MODEL	PESO WEIGHT (kg)	PESO IN FUNZIONE OPERATING WEIGHT (kg)
32	463	593
36	482	612
41	493	623

GEYSER 2 HT/HWS Dimensional layout

SD00335 - A

7-9-11-13-17

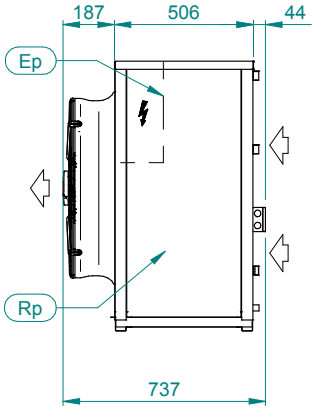

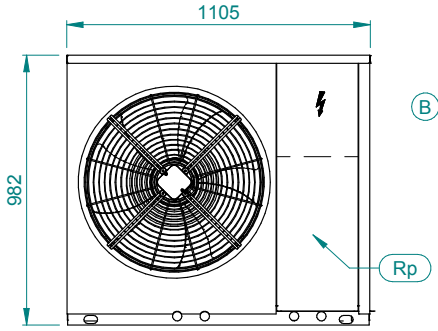

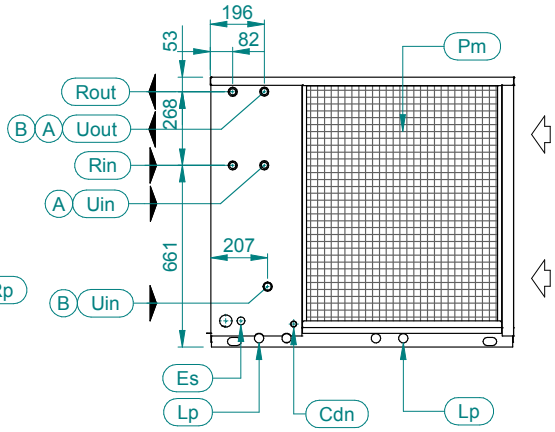

CONNESSIONI IDRAULICHE / HYDRAULIC CONNECTION

(A) ACQUA UTILIZZO SENZA MODULO IDRAULICO
USER WATER WITHOUT HYDRAULIC MODULE

(B) ACQUA UTILIZZO CON MODULO IDRAULICO 1P
USER WATER WITH HYDRAULIC MODULE 1P

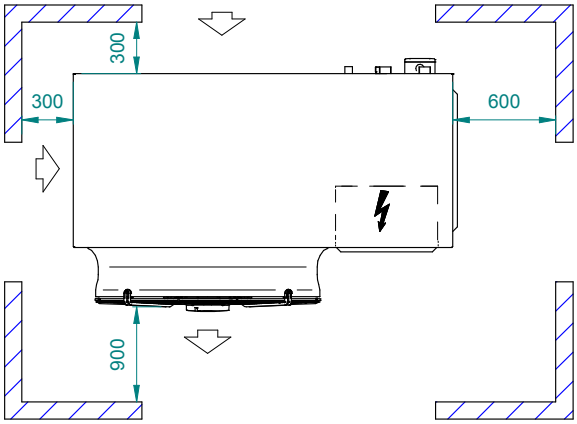

SPAZI DI INSTALLAZIONE / CLEARANCES

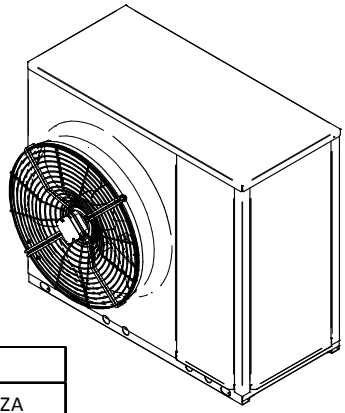

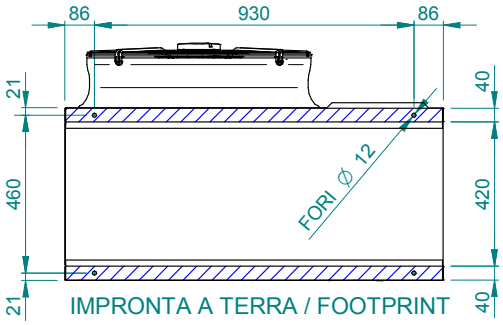

IMPRONTA A TERRA / FOOTPRINT

DIMENSIONI - DIMENSIONS		
LUNGHEZZA WIDTH	PROFONDITA' DEPTH	ALTEZZA HEIGHT
1105	737	982

MODELLO MODEL	PESO WEIGHT (kg)	PESO IN FUNZIONE OPERATING WEIGHT (kg)
7	111	112
9	116	117
11	123	124
13	130	131
17	141	142
7 1P	120	121
9 1P	125	126
11 1P	132	133
13 1P	139	140
17 1P	150	151

Ep	QUADRO ELETTRICO / ELECTRICAL PANEL	
Es	INGRESSO ALIMENTAZIONE ELETTRICA / ELECTRICAL SUPPLY INLET	
Rp	PANNELLO ASPORTABILE / REMOVABLE PANEL	
Pm	GRIGLIE DI PROTEZIONE / PROTECTIVE METAL MESH	
Lp	PUNTO DI SOLLEVAMENTO / LIFTING POINT	
⇦	FLUSSO ARIA / AIR FLOW	

Cdh	SCARICO CONDENSA / CONDENSATE DRAIN	ø 22
Uin	INGRESSO ACQUA UTILIZZO / USER WATER INLET	1" BSPM
Uout	USCITA ACQUA UTILIZZO / USER WATER OUTLET	1" BSPM
Rin	INGRESSO ACQUA RECUPERO / RECOVERY WATER INLET	1" BSPM
Rout	USCITA ACQUA RECUPERO / RECOVERY WATER OUTLET	1" BSPM

GEYSER 2 HT/HWS 1PS Dimensional layout

SD00336 - A

7-9-11-13-17

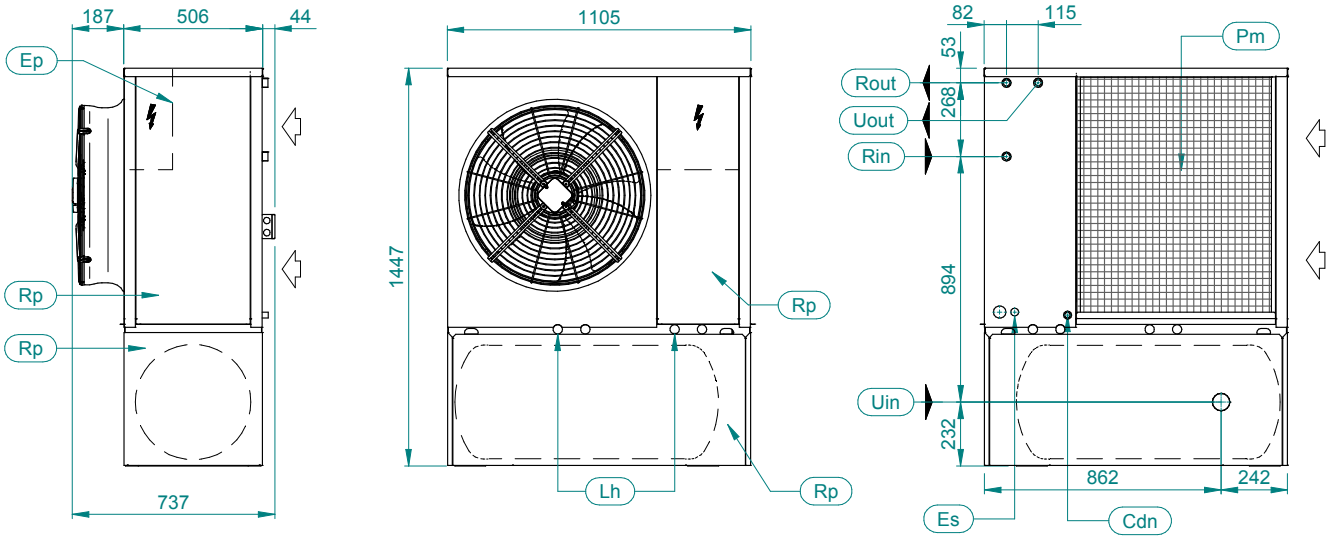

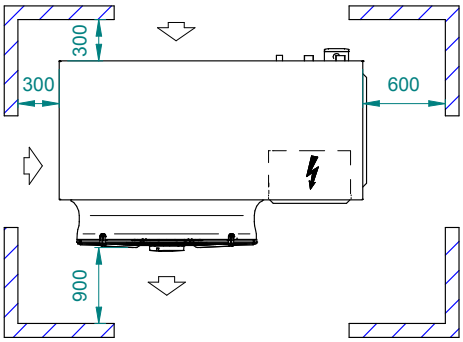

SPAZI DI INSTALLAZIONE / CLEARANCES

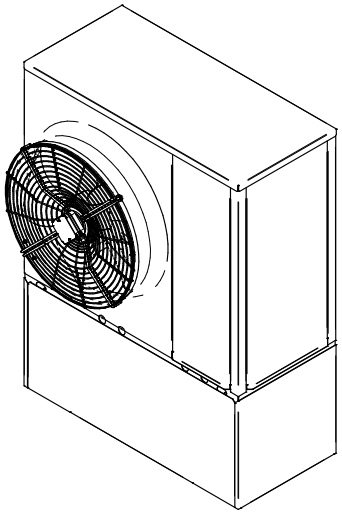

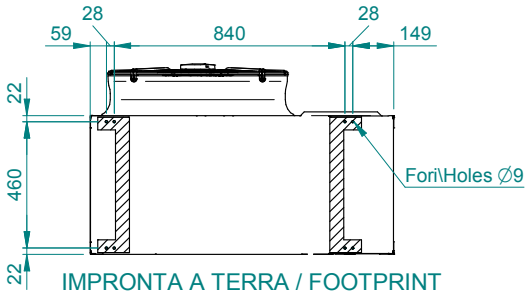

IMPRONTA A TERRA / FOOTPRINT

Ep	QUADRO ELETTRICO ELECTRICAL PANEL	
Es	INGRESSO ALIMENTAZIONE ELETTRICA ELECTRICAL SUPPLY INLET	
Lh	FORI SOLLEVAMENTO LIFTING HOLES	Ø35
Rp	PANNELLO ASPORTABILE REMOVABLE PANEL	
Pm	GRIGLIE DI PROTEZIONE PROTECTIVE METAL MESH	
⇦	FLUSSO ARIA AIR FLOW	

Cdh	SCARICO CONDENSA CONDENSATE DRAIN	ø 22
Uin	INGRESSO ACQUA UTILIZZO USER WATER INLET	1" BSPM
Uout	USCITA ACQUA UTILIZZO USER WATER OUTLET	1" BSPM
Rin	INGRESSO ACQUA RECUPERO RECOVERY WATER INLET	1" BSPM
Rout	USCITA ACQUA RECUPERO RECOVERY WATER OUTLET	1" BSPM

DIMENSIONI - DIMENSIONS		
LUNGHEZZA WIDTH	PROFONDITA' DEPTH	ALTEZZA HEIGHT
1105	737	1447

MODELLO MODEL	PESO WEIGHT (kg)	PESO IN FUNZIONE OPERATING WEIGHT (kg)
7	185	315
9	190	320
11	197	327
13	204	334
17	215	345

GEYSER 2 HT/HWS Dimensional layout

SD00337 - A

22-26

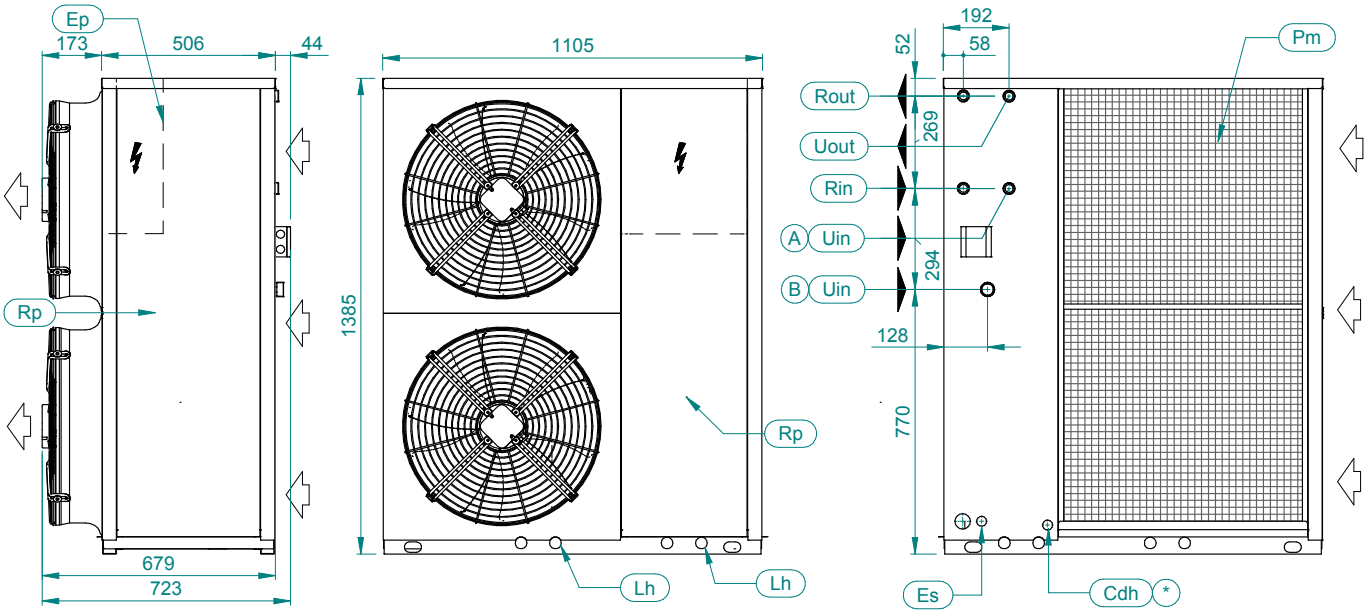

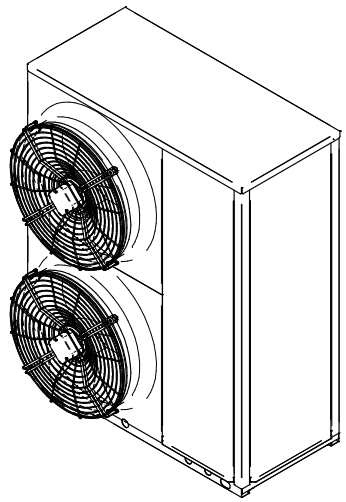

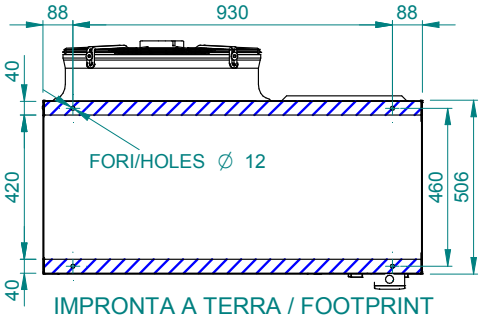

IMPRONTA A TERRA / FOOTPRINT

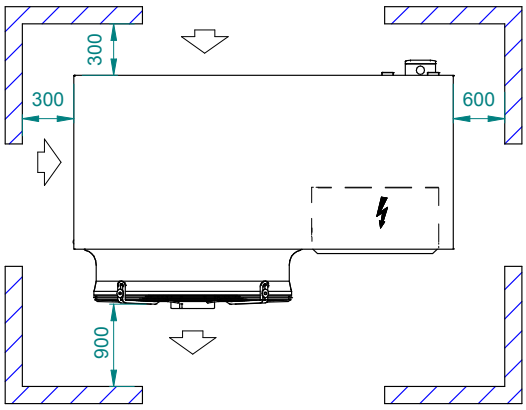

SPAZI DI INSTALLAZIONE / CLEARANCES

Uin		Uout
A 1" BSPM	B 1 1\4" BSPM	A B 1" BSPM

DIMENSIONI - DIMENSIONS		
LUNGHEZZA WIDTH	PROFONDITA' DEPTH	ALTEZZA HEIGHT
1105	723	1385

CONNESSIONI IDRAULICHE / HYDRAULIC CONNECTION

A ACQUA UTILIZZO SENZA MODULO IDRAULICO
USER WATER WITHOUT HYDRAULIC MODULE

B ACQUA UTILIZZO CON MODULO IDRAULICO 1P
USER WATER WITH HYDRAULIC MODULE 1P

MODELLO MODEL	PESO WEIGHT (kg)	PESO IN FUNZIONE OPERATING WEIGHT (kg)
22	241	243
26	262	264
22 1P	253	255
26 1P	274	276

Ep	QUADRO ELETTRICO / ELECTRICAL PANEL	
Es	INGRESSO ALIMENTAZIONE ELETTRICA / ELECTRICAL SUPPLY INLET	
Lh	FORI SOLLEVAMENTO / LIFTING HOLES	Ø34
Rp	PANNELLO ASPORTABILE / REMOVABLE PANEL	
Pm	GRIGLIE DI PROTEZIONE / PROTECTIVE METAL MESH	
Cdh	SCARICO CONDENSA / CONDENSATE DRAIN	ø 20

Uin	INGRESSO ACQUA UTILIZZO / USER WATER INLET	
Uout	USCITA ACQUA UTILIZZO / USER WATER OUTLET	
Rin	INGRESSO ACQUA RECUPERO / RECOVERY WATER INLET	1" BSPM
Rout	USCITA ACQUA RECUPERO / RECOVERY WATER OUTLET	1" BSPM
⇦	FLUSSO ARIA / AIR FLOW	

(*) OPZIONALE / OPTIONAL

GEYSER 2 HT/HWS 1PS Dimensional layout
22-26

SD00338 - A

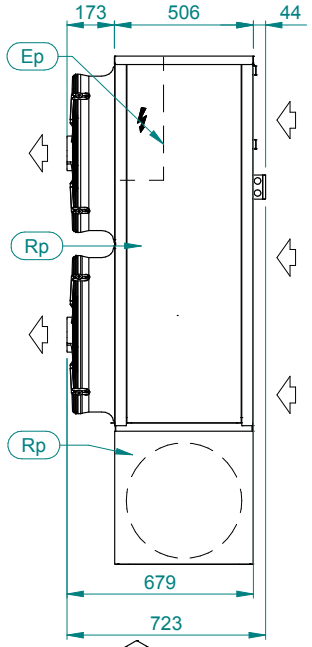

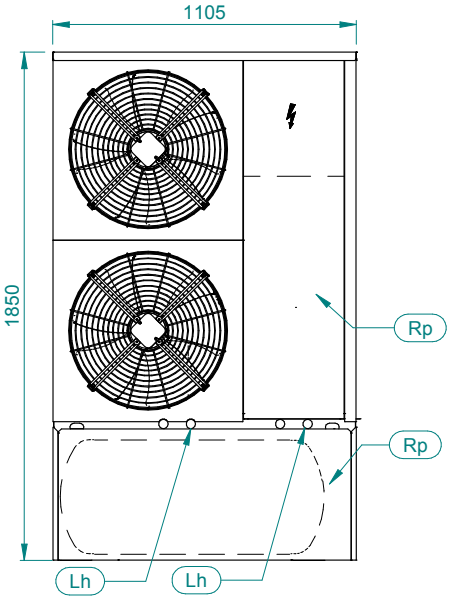

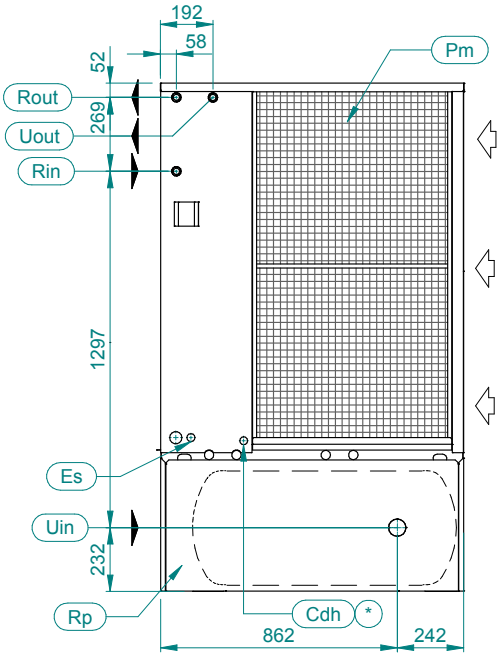

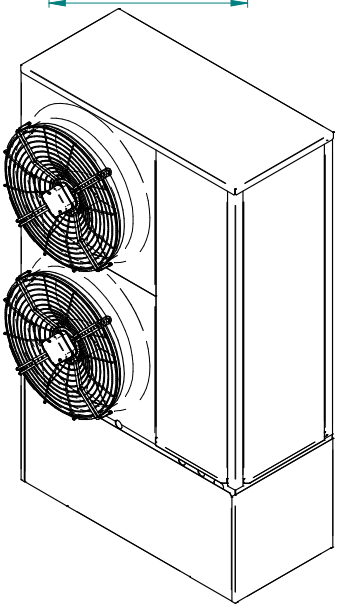

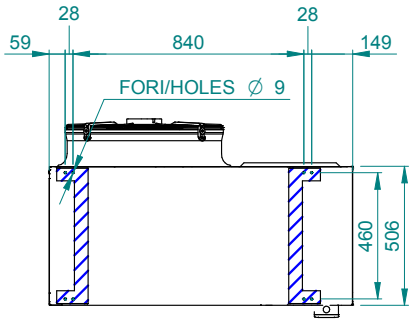

IMPRONTA A TERRA / FOOTPRINT

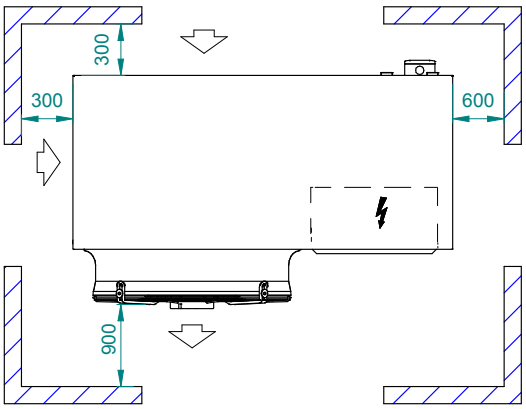

SPAZI DI INSTALLAZIONE / CLEARANCES
1:20

DIMENSIONI - DIMENSIONS		
LUNGHEZZA WIDTH	PROFONDITA' DEPTH	ALTEZZA HEIGHT
1105	723	1850

MODELLO MODEL	PESO WEIGHT (kg)	PESO IN FUNZIONE OPERATING WEIGHT (kg)
22	318	448
26	339	469

Ep	QUADRO ELETTRICO ELECTRICAL PANEL	
Es	INGRESSO ALIMENTAZIONE ELETTRICA ELECTRICAL SUPPLY INLET	
Lh	FORI SOLLEVAMENTO LIFTING HOLES	Ø34
Rp	PANNELLO ASPORTABILE REMOVABLE PANEL	
Pm	GRIGLIE DI PROTEZIONE PROTECTIVE METAL MESH	
Cdh	SCARICO CONDENSA CONDENSATE DRAIN	ø 22

Uin	INGRESSO ACQUA UTILIZZO USER WATER INLET	1" 1/4 BSPM
Uout	USCITA ACQUA UTILIZZO USER WATER OUTLET	1" BSPM
Rin	INGRESSO ACQUA RECUPERO RECOVERY WATER INLET	1" BSPM
Rout	USCITA ACQUA RECUPERO RECOVERY WATER OUTLET	1" BSPM
⇦	FLUSSO ARIA AIR FLOW	

(*) OPZIONALE / OPTIONAL

GEYSER 2 HT/HWS Dimensional layout

SD00339 - A

32-36-41

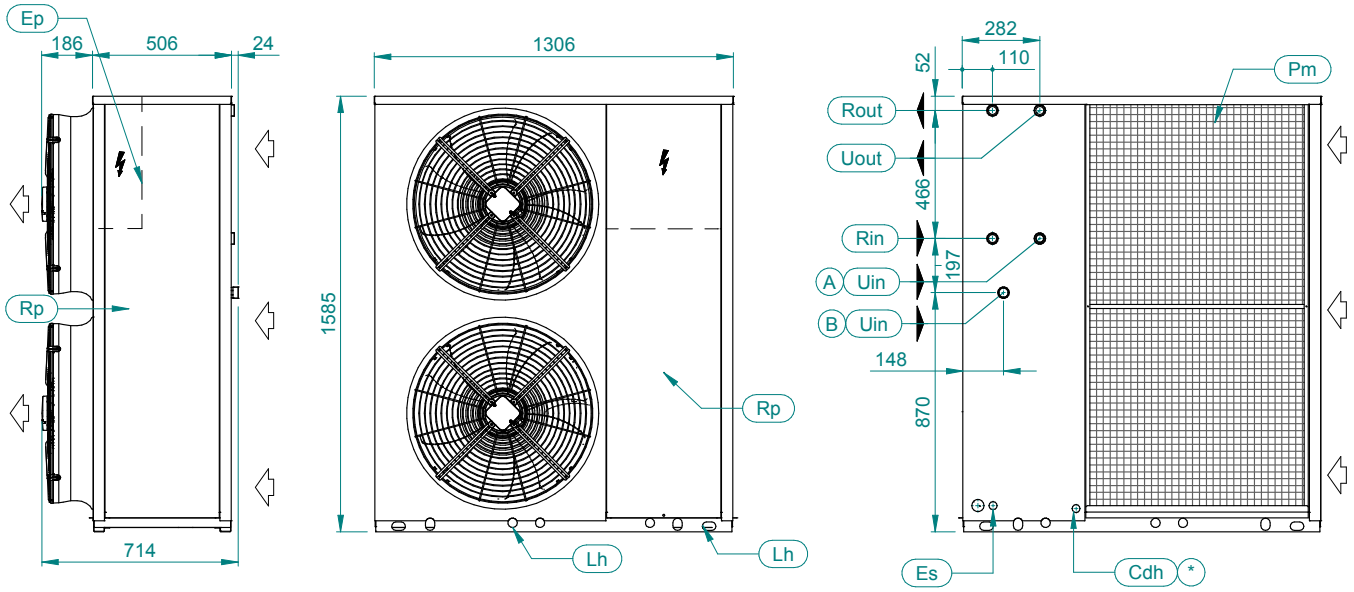

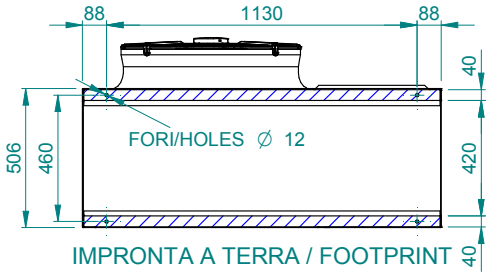

IMPRONTA A TERRA / FOOTPRINT

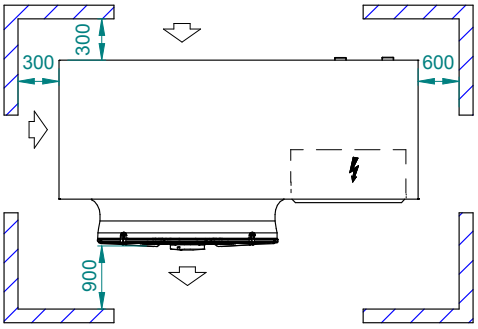

SPAZI DI INSTALLAZIONE / CLEARANCES

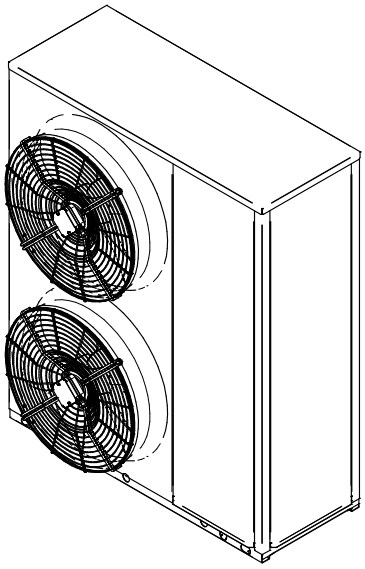

MODELLO MODEL	PESO WEIGHT (kg)	PESO IN FUNZIONE OPERATING WEIGHT (kg)
32	398	400
36	419	422
41	431	434
32 1P	413	415
36 1P	434	437
41 1P	447	450

CONNESSIONI IDRAULICHE / HYDRAULIC CONNECTION

(A) ACQUA UTILIZZO SENZA MODULO IDRAULICO
USER WATER WITHOUT HYDRAULIC MODULE

(B) ACQUA UTILIZZO CON MODULO IDRAULICO 1P
USER WATER WITH HYDRAULIC MODULE 1P

DIMENSIONI - DIMENSIONS		
LUNGHEZZA WIDTH	PROFONDITA' DEPTH	ALTEZZA HEIGHT
1306	714	1585

Ep	QUADRO ELETTRICO / ELECTRICAL PANEL	
Es	INGRESSO ALIMENTAZIONE ELETTRICA / ELECTRICAL SUPPLY INLET	
Lh	FORI SOLLEVAMENTO / LIFTING HOLES	Ø34
Rp	PANNELLO ASPORTABILE / REMOVABLE PANEL	
Pm	GRIGLIE DI PROTEZIONE / PROTECTIVE METAL MESH	
Cdh	SCARICO CONDENSA / CONDENSATE DRAIN	ø 20

Uin	INGRESSO ACQUA UTILIZZO / USER WATER INLET	1" 1/4 BSPM
Uout	USCITA ACQUA UTILIZZO / USER WATER OUTLET	1" 1/4 BSPM
Rin	INGRESSO ACQUA RECUPERO / RECOVERY WATER INLET	1" 1/4 BSPM
Rout	USCITA ACQUA RECUPERO / RECOVERY WATER OUTLET	1" 1/4 BSPM
⇦	FLUSSO ARIA / AIR FLOW	

(*) OPZIONALE / OPTIONAL

GEYSER 2 HT/HWS 1PS Dimensional layout
32-36-41

SD00340 - A

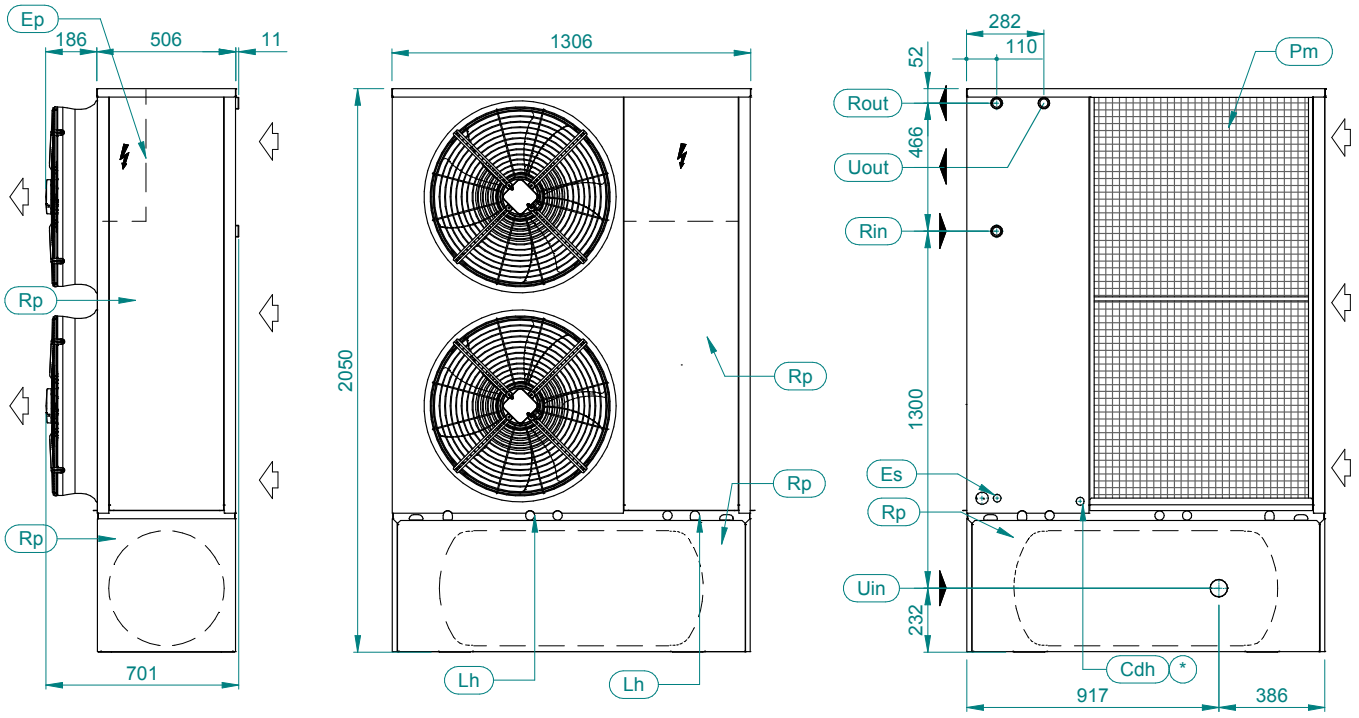

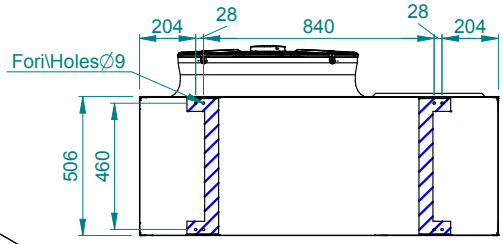

IMPRONTA A TERRA / FOOTPRINT

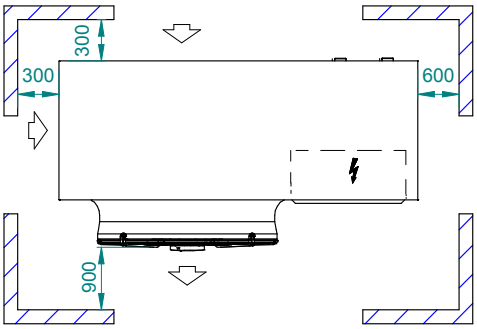

SPAZI DI INSTALLAZIONE / CLEARANCES

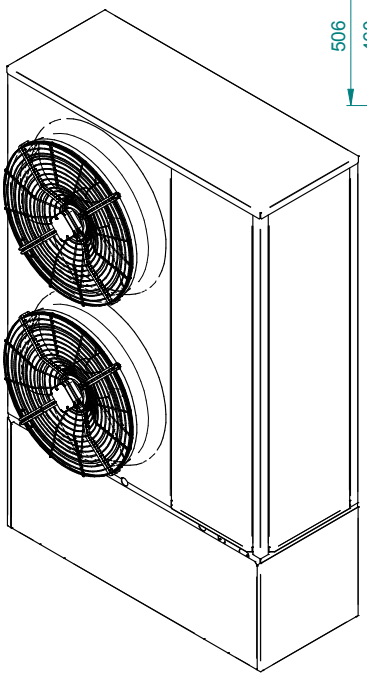

MODELLO MODEL	PESO WEIGHT (kg)	PESO IN FUNZIONE OPERATING WEIGHT (kg)
32	478	608
36	499	629
41	512	642

DIMENSIONI - DIMENSIONS		
LUNGHEZZA WIDTH	PROFONDITA' DEPTH	ALTEZZA HEIGHT
1306	701	2050

Ep	QUADRO ELETTRICO / ELECTRICAL PANEL	
Es	INGRESSO ALIMENTAZIONE ELETTRICA / ELECTRICAL SUPPLY INLET	
Lh	FORI SOLLEVAMENTO / LIFTING HOLES	Ø34
Rp	PANNELLO ASPORTABILE / REMOVABLE PANEL	
Pm	GRIGLIE DI PROTEZIONE / PROTECTIVE METAL MESH	
Cdh	SCARICO CONDENSA / CONDENSATE DRAIN	ø 22

Uin	INGRESSO ACQUA UTILIZZO / USER WATER INLET	1" 1/4 BSPM
Uout	USCITA ACQUA UTILIZZO / USER WATER OUTLET	1" 1/4 BSPM
Rin	INGRESSO ACQUA RECUPERO / RECOVERY WATER INLET	1" 1/4 BSPM
Rout	USCITA ACQUA RECUPERO / RECOVERY WATER OUTLET	1" 1/4 BSPM
⇦	FLUSSO ARIA / AIR FLOW	

(*) OPZIONALE / OPTIONAL

GEYSER 2 HT Dimensional layout
50-60-70-80-90

SD00251 - B

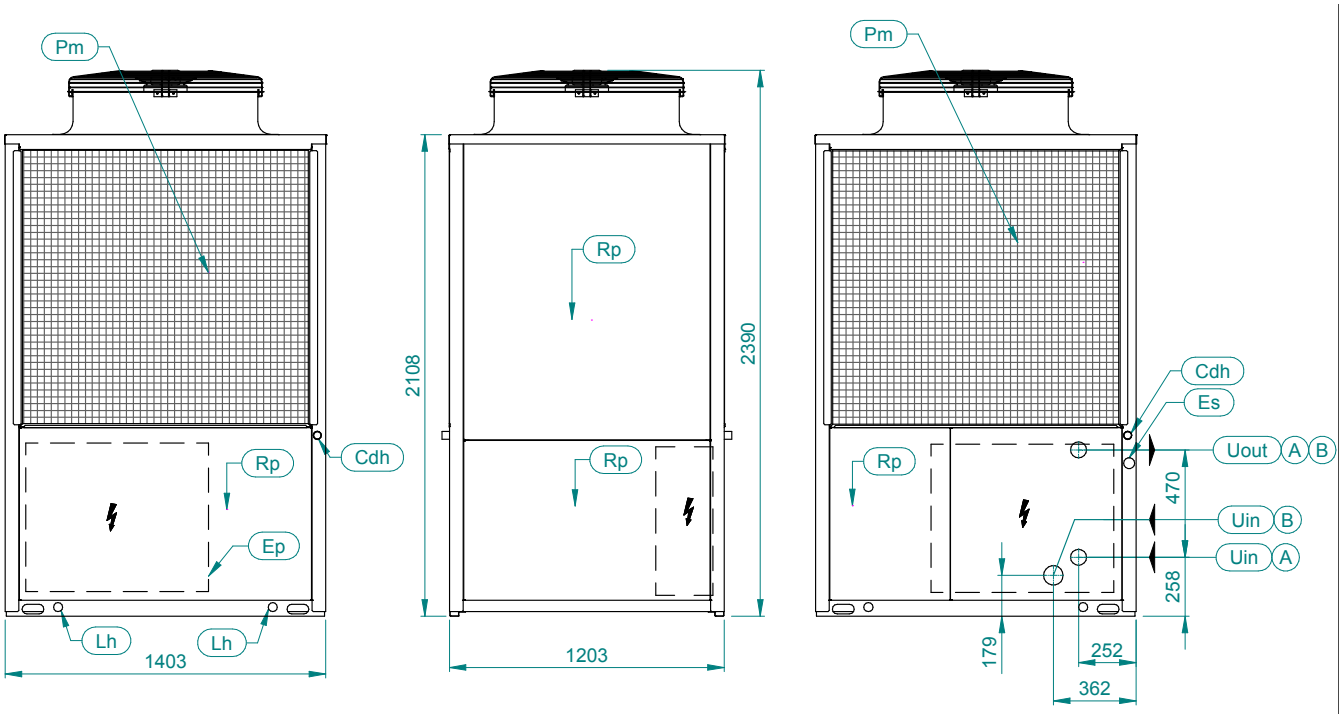

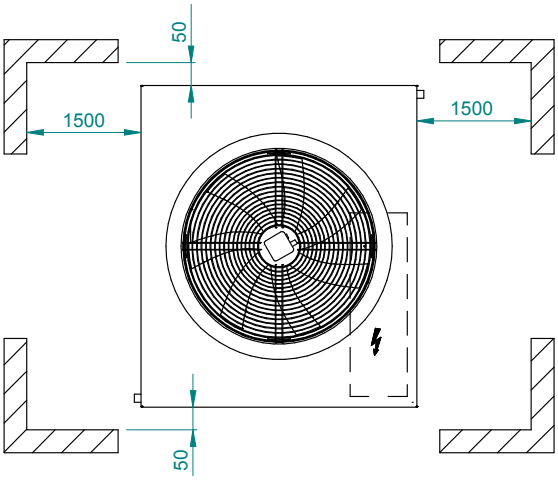

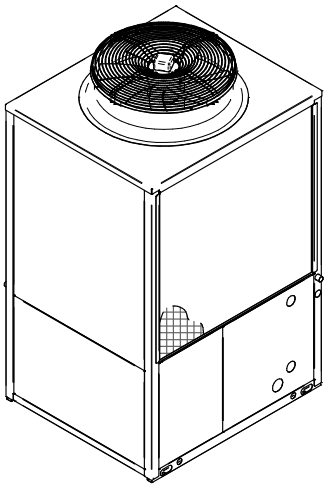

SPAZI DI INSTALLAZIONE / CLEARANCES

Ep	QUADRO ELETTRICO ELECTRICAL PANEL
Es	INGRESSO ALIMENTAZIONE ELETTRICA ELECTRICAL SUPPLY INLET
Lh	FORI DI SOLLEVAMENTO LIFTING HOLES
Pm	GRIGLIE DI PROTEZIONE PROTECTIVE METAL MESH

Rp	PANNELLO ASPORTABILE REMOVABLE PANEL	
Cdh	SCARICO CONDENSA CONDENSATE DRAIN	ø35
Uin	INGRESSO ACQUA UTILIZZO USER WATER INLET	1"1/2 BSPM (A) 2" BSPM (B)
Uout	USCITA ACQUA UTILIZZO USER WATER OUTLET	1" 1/2 BSPM

CONNESSIONI IDRAULICHE / HYDRAULIC CONNECTION

(A) ACQUA UTILIZZO SENZA MODULO IDRAULICO
USER WATER WITHOUT HYDRAULIC MODULE

(B) ACQUA UTILIZZO CON MODULO IDRAULICO 1P-2P
USER WATER WITH HYDRAULIC MODULE 1P-2P

DIMENSIONI / DIMENSIONS		
LUNGHEZZA WIDTH	PROFONDITA' DEPTH	ALTEZZA HEIGHT
1403	1203	2390

GEYSER 2 HT Dimensional layout
50-60-70-80-90

SD00251 - B

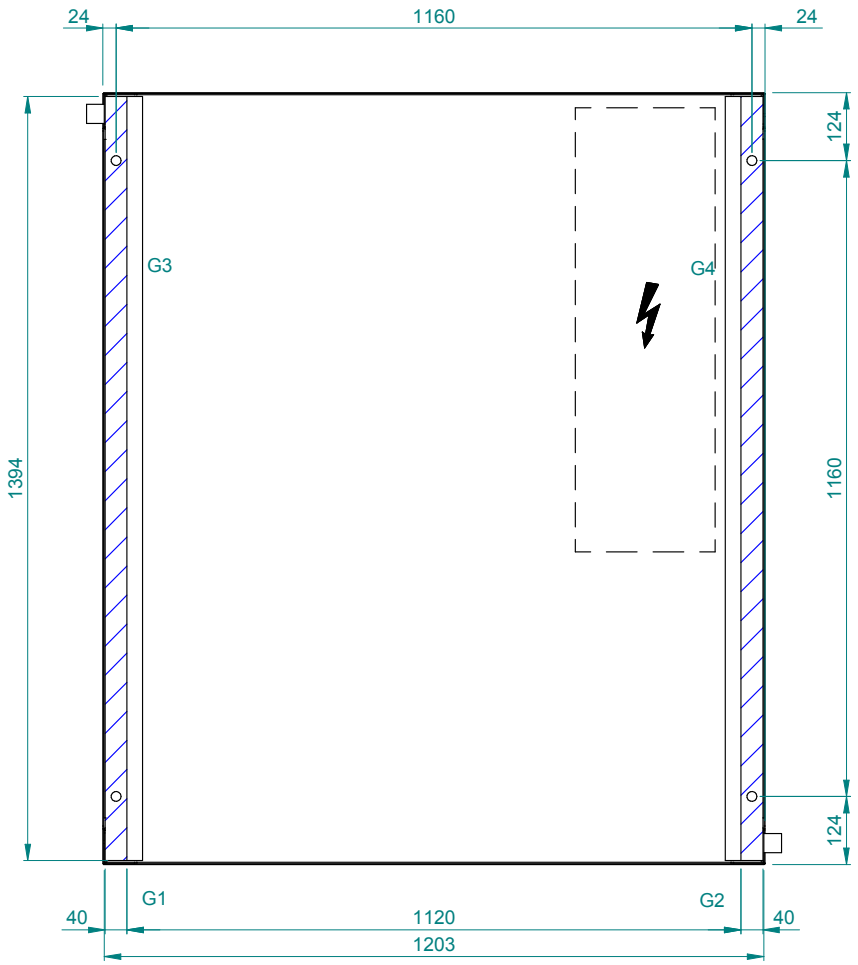

IMPRONTA A TERRA \ FOOTPRINT

Fh	FORI DI FISSAGGIO FIXING HOLES	Ø18

G..	PUNTI DI APPOGGIO ANTIVIBRANTI VIBRATION DAMPER FOOT HOLDS

	MODELLO MODEL	PESO WEIGHT (kg)	PESO IN FUNZIONE OPERATING WEIGHT (kg)
	50	587	590
	60	604	607
	70	614	617
	80	632	635
	90	643	646
Δ PESO Δ WEIGHT	MOD. 1P	16	18
Δ PESO Δ WEIGHT	MOD. 2P	32	34

	G1 (kg)	G2 (kg)	G3 (kg)	G4 (kg)
50	159	164	155	112
60	164	169	160	115
70	166	171	162	117
80	171	176	167	121
90	174	179	170	123
50 1P	161	166	162	119
60 1P	166	171	167	122
70 1P	168	173	169	124
80 1P	173	178	174	128
90 1P	176	181	177	130
50 2P	167	172	170	127
60 2P	172	177	175	130
70 2P	174	179	177	132
80 2P	179	184	182	136
90 2P	182	187	185	138

GEYSER 2 HT/HWS Dimensional layout
50-60-70-80-90

SD00249 - C

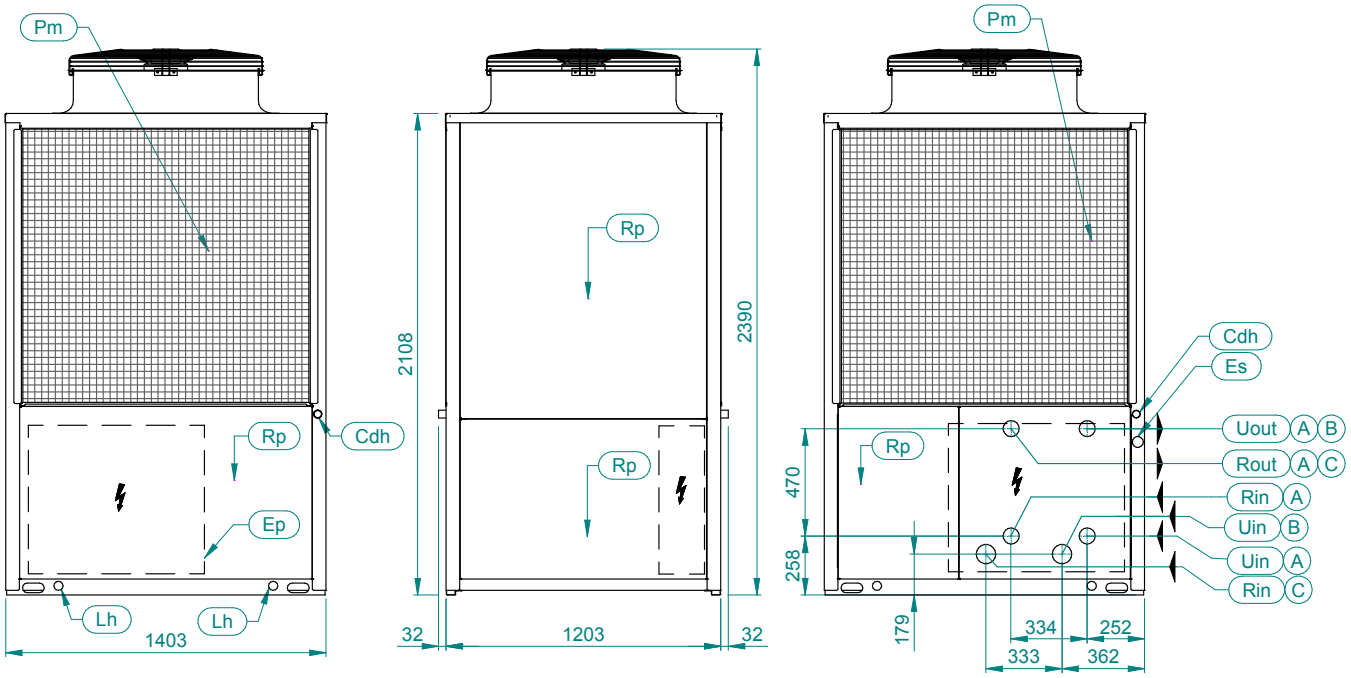

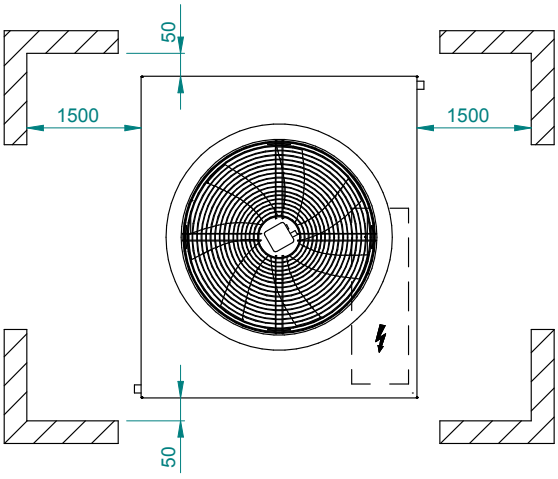

SPAZI DI INSTALLAZIONE / CLEARANCES

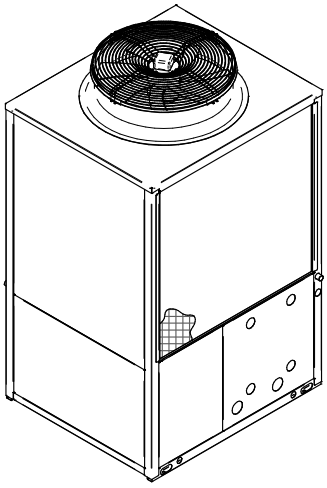

Ep	QUADRO ELETTRICO ELECTRICAL PANEL		Cdh	SCARICO CONDENSA VERSIONE HP CONDENSATE DRAIN HP VERSION	ø35
Es	INGRESSO ALIMENTAZIONE ELETTRICA ELECTRICAL SUPPLY INLET		Uin	INGRESSO ACQUA UTILIZZO USER WATER INLET	1" 1/2 BSPM (A) 2" BSPM (B)
Lh	FORI DI SOLLEVAMENTO LIFTING HOLES		Uout	USCITA ACQUA UTILIZZO USER WATER OUTLET	1" 1/2 BSPM
Pm	GRIGLIE DI PROTEZIONE PROTECTIVE METAL MESH		Rin	INGRESSO ACQUA RECUPERO RECOVERY WATER INLET	1" 1/2 BSPM (A) 2" BSPM (C)
Rp	PANNELLO ASPORTABILE REMOVABLE PANEL		Rout	USCITA ACQUA RECUPERO RECOVERY WATER OUTLET	1" 1/2 BSPM

CONNESSIONI IDRAULICHE / HYDRAULIC CONNECTION

(A) ACQUA UTILIZZO\RECUPERO SENZA MODULO IDRAULICO
USER\RECOVERY WATER WITHOUT HYDRAULIC MODULE

(B) ACQUA UTILIZZO CON MODULO IDRAULICO 1P-2P
USER WATER WITH HYDRAULIC MODULE 1P-2P

(C) ACQUA RECUPERO CON MODULO IDRAULICO 1R
RECOVERY WATER WITH HYDRAULIC MODULE 1R

DIMENSIONI / DIMENSIONS		
LUNGHEZZA WIDTH	PROFONDITA' DEPTH	ALTEZZA HEIGHT
1403	1203	2390

GEYSER 2 HT/HWS Dimensional layout
50-60-70-80-90

SD00249 - C

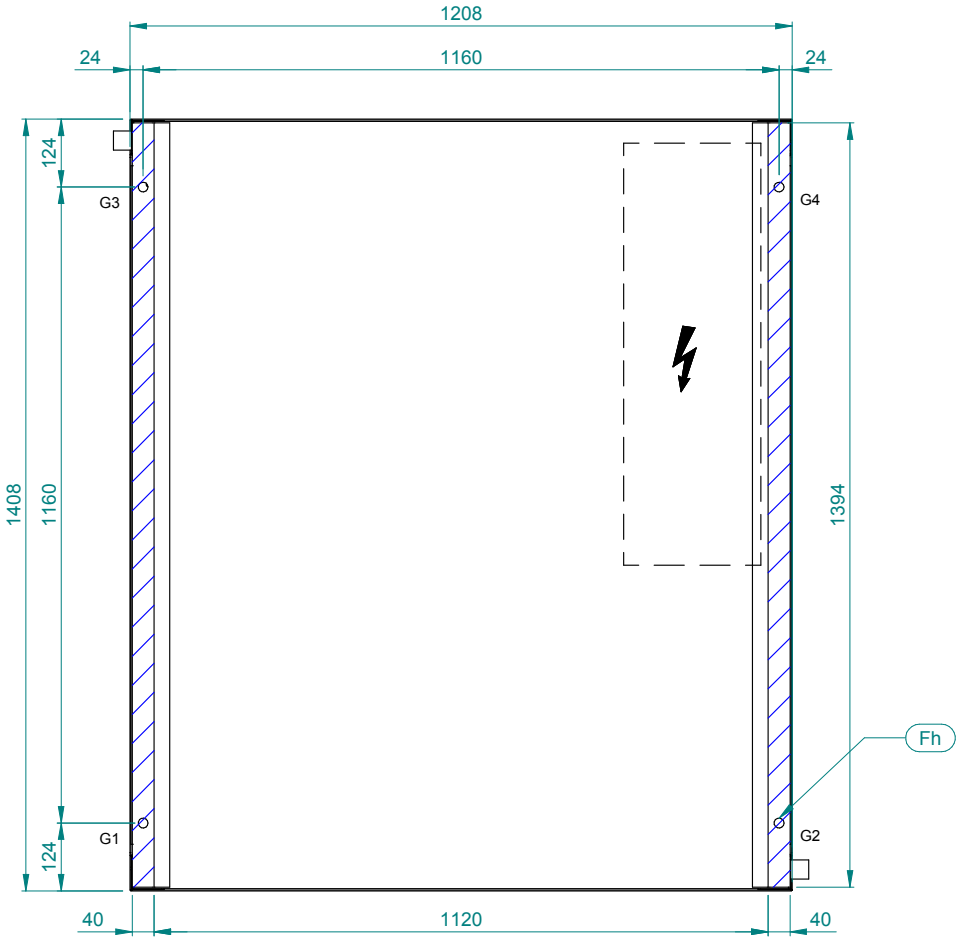

IMPRONTA A TERRA \ FOOTPRINT

Fh	FORI DI FISSAGGIO FIXING HOLES	Ø18
G..	PUNTI DI APPOGGIO ANTIVIBRANTI VIBRATION DAMPER FOOT HOLDS	

	MODELLO MODEL	PESO WEIGHT (kg)	PESO IN FUNZIONE OPERATING WEIGHT (kg)
	50	602	605
	60	619	622
	70	629	632
	80	647	650
	90	657	660
Δ PESO Δ WEIGHT	MOD. 1P	16	18
Δ PESO Δ WEIGHT	MOD. 2P	32	34
Δ PESO Δ WEIGHT	MOD. 1R	17	19

MODELLO MODEL	G1 (kg)	G2 (kg)	G3 (kg)	G4 (kg)
50	166	164	163	112
60	171	169	168	115
70	173	171	170	117
80	178	176	175	121
90	181	179	178	123
50 1P	168	166	170	119
60 1P	173	171	175	122
70 1P	175	173	177	124
80 1P	180	178	182	128
90 1P	183	181	185	130
50 2P	174	174	178	127
60 2P	179	179	183	130
70 2P	181	181	185	132
80 2P	186	186	190	136
90 2P	189	189	193	138

GEYSER 2 HT HAD Dimensional layout

SD00253 - C

50-60-70-80-90

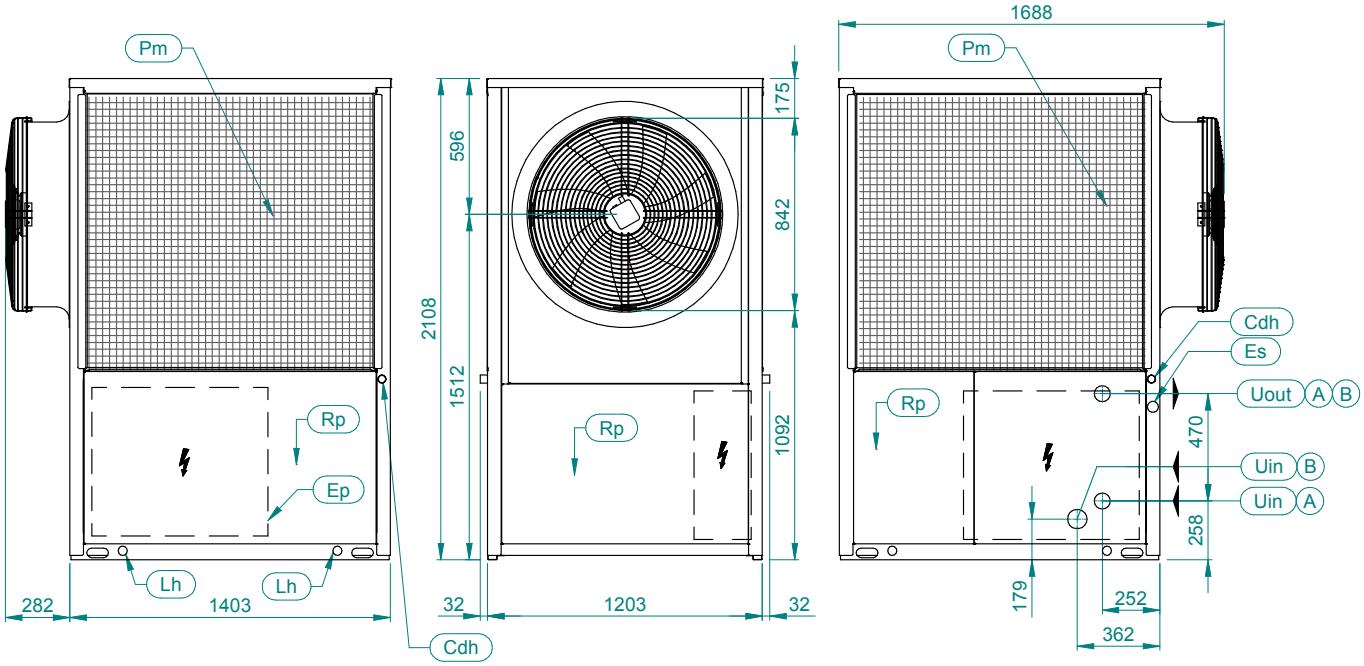

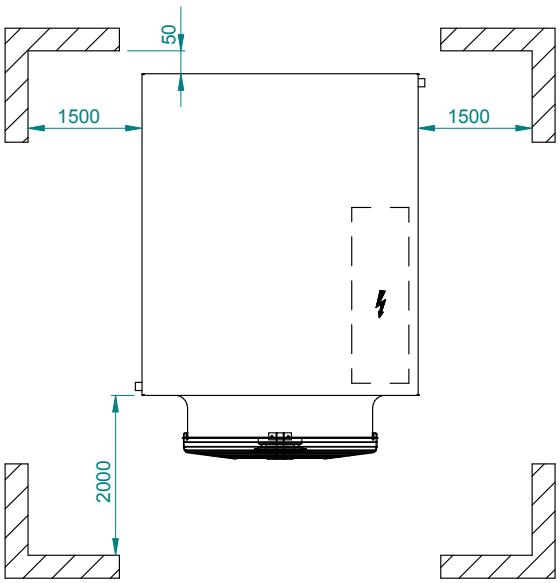

SPAZI DI INSTALLAZIONE / CLEARANCES

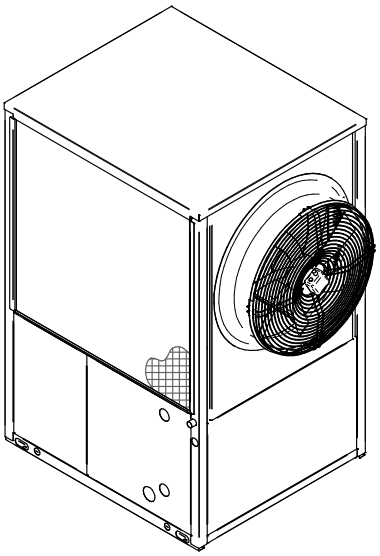

Ep	QUADRO ELETTRICO ELECTRICAL PANEL	
Es	INGRESSO ALIMENTAZIONE ELETTRICA ELECTRICAL SUPPLY INLET	
Lh	FORI DI SOLLEVAMENTO LIFTING HOLES	
Pm	GRIGLIE DI PROTEZIONE PROTECTIVE METAL MESH	

Rp	PANNELLO ASPORTABILE REMOVABLE PANEL	
Cdh	SCARICO CONDENSA CONDENSATE DRAIN	ø35
Uin	INGRESSO ACQUA UTILIZZO USER WATER INLET	1"1/2 BSPM (A) 2" BSPM (B)
Uout	USCITA ACQUA UTILIZZO USER WATER OUTLET	1"1/2 BSPM

CONNESSIONI IDRAULICHE / HYDRAULIC CONNECTION

(A) ACQUA UTILIZZO SENZA MODULO IDRAULICO
USER WATER WITHOUT HYDRAULIC MODULE

(B) ACQUA UTILIZZO CON MODULO IDRAULICO 1P-2P
USER WATER WITH HYDRAULIC MODULE 1P-2P

DIMENSIONI / DIMENSIONS		
LUNGHEZZA WIDTH	PROFONDITA' DEPTH	ALTEZZA HEIGHT
1685	1203	2108

GEYSER 2 HT HAD Dimensional layout

SD00253 - C

50-60-70-80-90

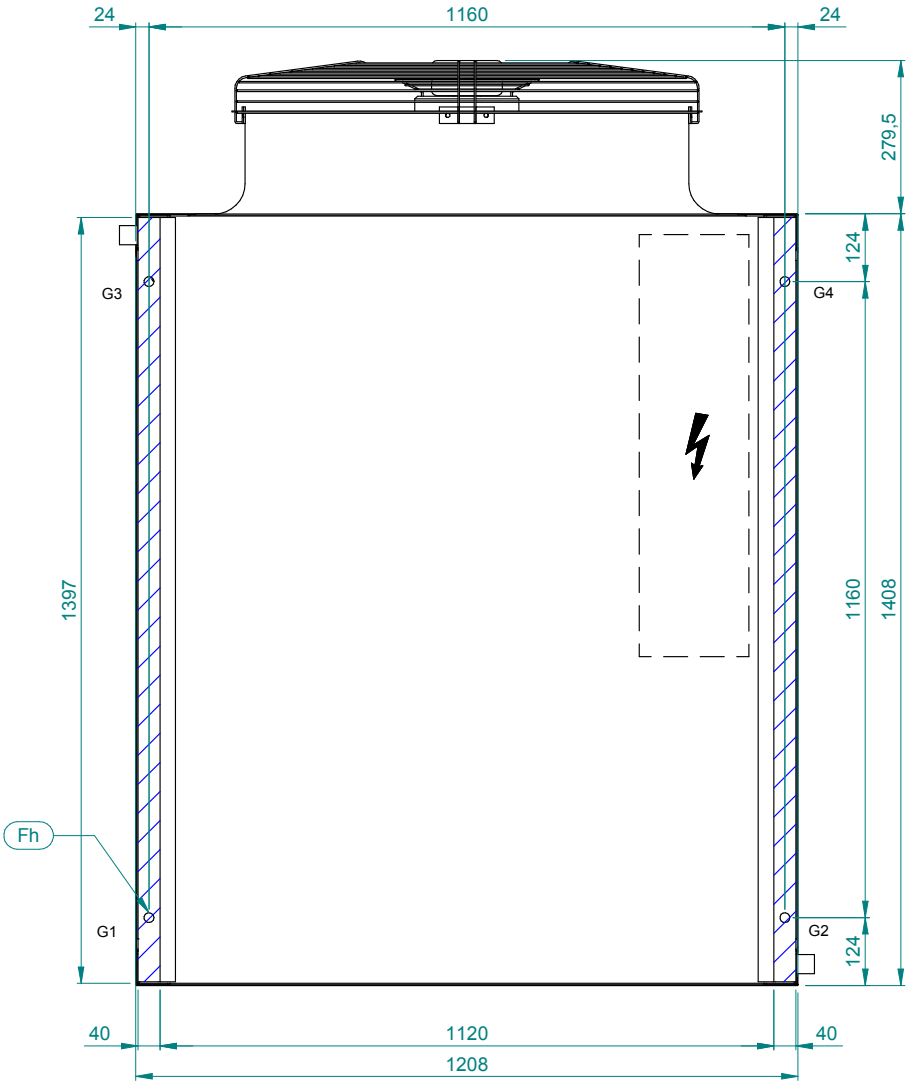

IMPRONTA A TERRA \ FOOTPRINT

	MODELLO MODEL	PESO WEIGHT (kg)	PESO IN FUNZIONE OPERATING WEIGHT (kg)
	50	587	590
	60	604	607
	70	514	517
	80	633	636
	90	643	646
Δ PESO Δ WEIGHT	MOD. 1P	16	18
Δ PESO Δ WEIGHT	MOD. 2P	32	34

MODELLO MODEL	G1 (kg)	G2 (kg)	G3 (kg)	G4 (kg)
50	132	137	190	136
60	137	142	185	139
70	138	144	187	139
80	144	149	182	144
90	137	153	185	146
50 1P	134	139	197	143
60 1P	139	144	192	146
70 1P	140	146	194	146
80 1P	146	151	189	151
90 1P	139	155	192	153
50 2P	140	145	205	151
60 2P	145	150	200	154
70 2P	146	152	202	154
80 2P	152	157	197	159
90 2P	145	161	200	161

Fh	FORI DI FISSAGGIO FIXING HOLES	Ø18

G..	PUNTI DI APPOGGIO ANTIVIBRANTI VIBRATION DAMPER FOOT HOLDS

GEYSER 2 HT/HWS HAD Dimensional layout
50-60-70-80-90

SD00255 - C

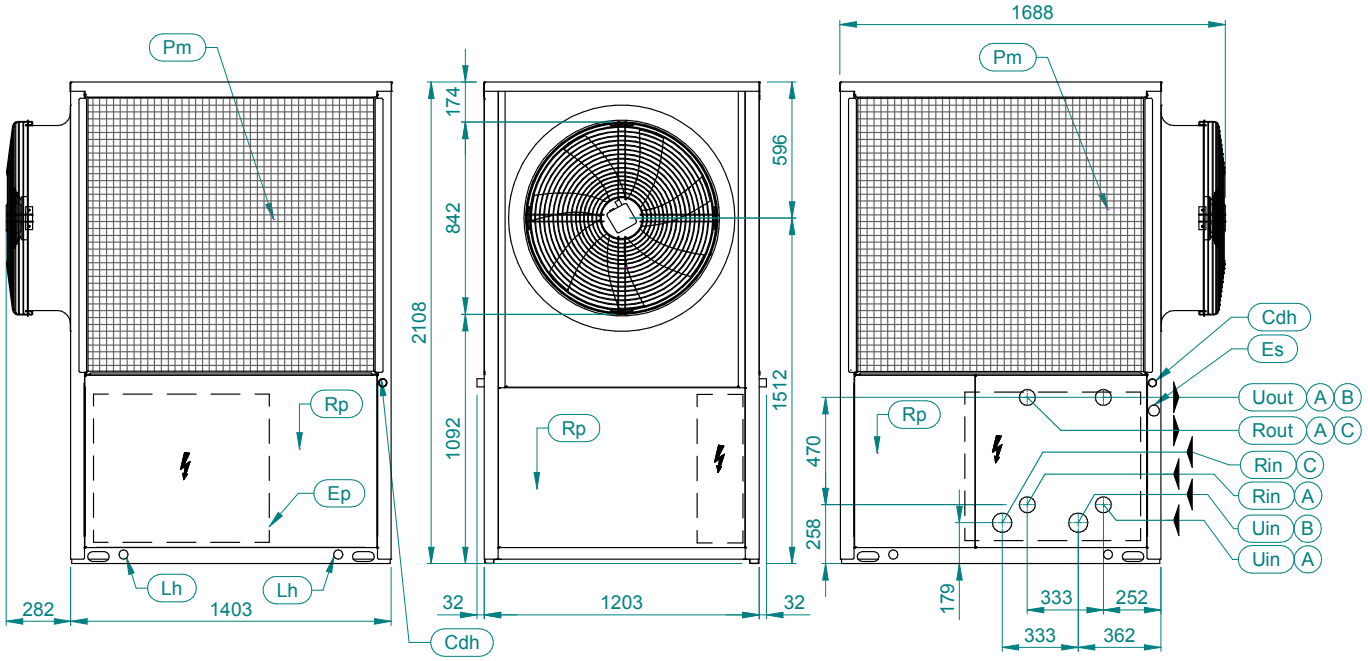

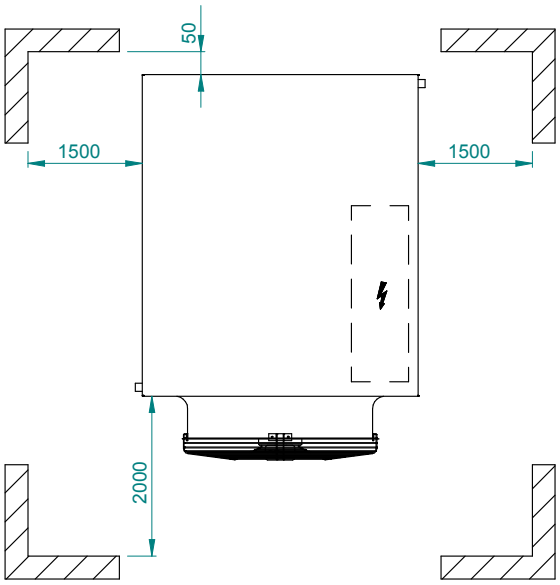

SPAZI DI INSTALLAZIONE / CLEARANCES

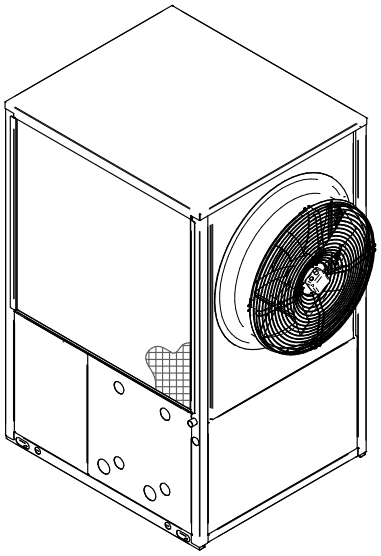

Ep	QUADRO ELETTRICO ELECTRICAL PANEL		Cdh	SCARICO CONDENSA VERSIONE HP CONDENSATE DRAIN HP VERSION	ø35
Es	INGRESSO ALIMENTAZIONE ELETTRICA ELECTRICAL SUPPLY INLET		Uin	INGRESSO ACQUA UTILIZZO USER WATER INLET	1" 1/2 BSPM (A) 2" BSPM (B)
Lh	FORI DI SOLLEVAMENTO LIFTING HOLES		Uout	USCITA ACQUA UTILIZZO USER WATER OUTLET	1" 1/2 BSPM
Pm	GRIGLIE DI PROTEZIONE PROTECTIVE METAL MESH		Rin	INGRESSO ACQUA RECUPERO RECOVERY WATER INLET	1" 1/2 BSPM (A) 2" BSPM (C)
Rp	PANNELLO ASPORTABILE REMOVABLE PANEL		Rout	USCITA ACQUA RECUPERO RECOVERY WATER OUTLET	1" 1/2 BSPM

CONNESSIONI IDRAULICHE / HYDRAULIC CONNECTION

- (A) ACQUA UTILIZZO\RECUPERO SENZA MODULO IDRAULICO
  USER\RECOVERY WATER WITHOUT HYDRAULIC MODULE
- (B) ACQUA UTILIZZO CON MODULO IDRAULICO 1P-2P
  USER WATER WITH HYDRAULIC MODULE 1P-2P
- (C) ACQUA RECUPERO CON MODULO IDRAULICO 1R
  RECOVERY WATER WITH HYDRAULIC MODULE 1R

DIMENSIONI / DIMENSIONS		
LUNGHEZZA WIDTH	PROFONDITA' DEPTH	ALTEZZA HEIGHT
1685	1203	2108

GEYSER 2 HT/HWS HAD Dimensional layout
50-60-70-80-90

SD00255 - C

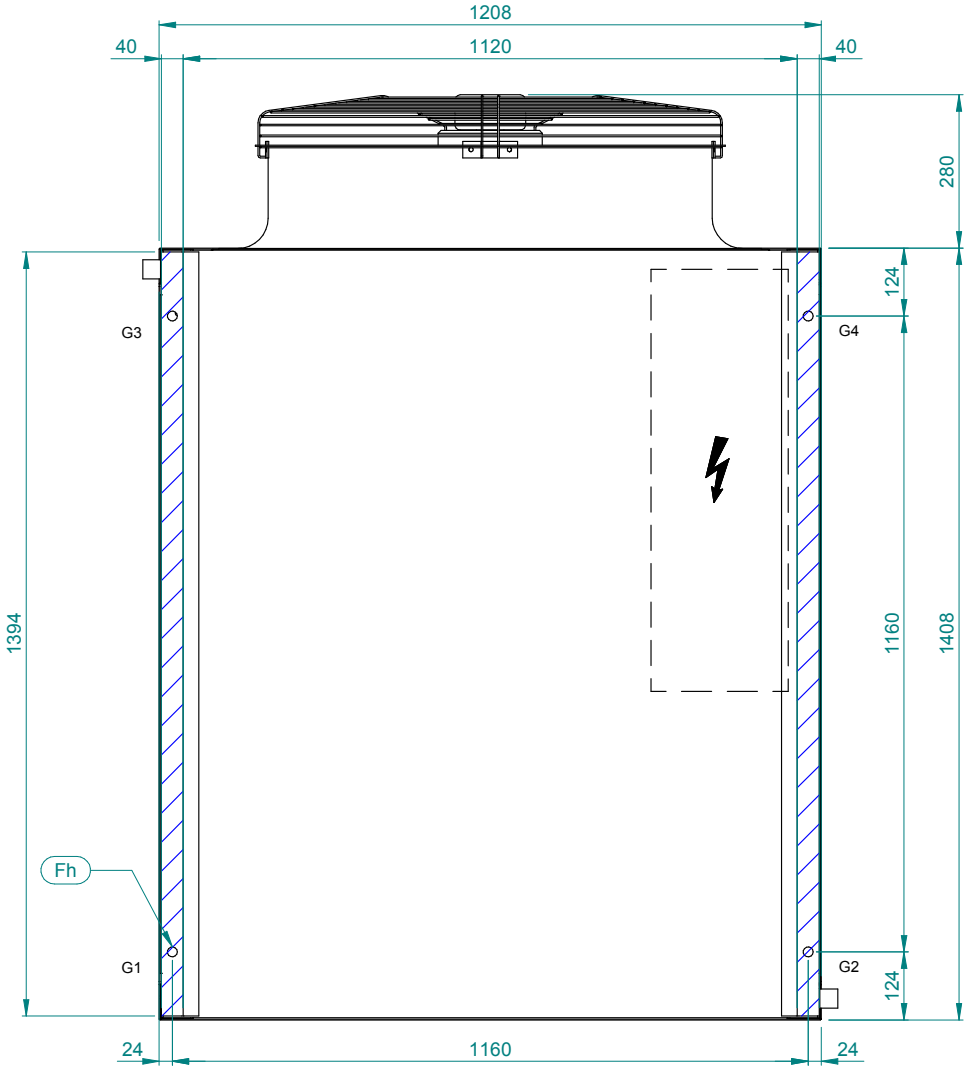

IMPRONTA A TERRA \ FOOTPRINT

	MODELLO MODEL	PESO WEIGHT (kg)	PESO IN FUNZIONE OPERATING WEIGHT (kg)
	50	602	605
	60	619	622
	70	629	632
	80	647	650
	90	658	661
Δ PESO Δ WEIGHT	MOD. 1P	16	18
Δ PESO Δ WEIGHT	MOD. 2P	32	34
Δ PESO Δ WEIGHT	MOD. 1R	17	19

MODELLO MODEL	G1 (kg)	G2 (kg)	G3 (kg)	G4 (kg)
50	146	144	182	133
60	151	149	187	136
70	153	151	189	138
80	158	156	194	142
90	161	159	197	144
50 1P	148	146	189	140
60 1P	153	151	194	143
70 1P	155	153	196	145
80 1P	160	158	201	149
90 1P	163	161	204	151
50 2P	154	152	197	148
60 2P	159	157	202	151
70 2P	161	159	204	153
80 2P	166	164	209	157
90 2P	169	167	212	159

Fh	FORI DI FISSAGGIO FIXING HOLES	Ø18
G..	PUNTI DI APPOGGIO ANTIVIBRANTI VIBRATION DAMPER FOOT HOLDS	

1021320060 2_GEYSER 2_04-12-2015

Blue Box Group S.r.l.
via Valletta,5 - 30010 Cantarana di Cona (VE) - Italy
tel. +39 0426 921111 - fax +39 0426 302222
www.blueboxgroup.it

BlueBox
A Swegon Group company